FEELWORLD®

PTZ Camera



User Manual

Preface

Thank you for purchase our PTZ camera, this manual is to ensure you can use the product properly and avoid danger while operating. Before using this product, please read the user manual carefully and keep it properly for future reference.

Remark: this manual suitable for POE& NDI products.

Overview

This manual is about PTZ camera operation

Graphic Symbols

Description of graphic symbols used in this manual

Symbols	Description
illustration	This symbol indicates that the words are clarification or supplement to this article.
Caution	This symbol indicates that negligence of the instructions may lead to mishandling that may cause injury or property damage.
Danger	This symbol indicates a risk that may result in damage to this machine or documents. Follow the instructions to avoid property damage.

Attention

This manual introduces functions, installations and operations for this product in details. Please read this manual carefully before installation and use.

Precautions:

This product can only be used in the specified conditions in order to avoid any damage to the camera:

1) Do not expose the product to rain or moisture.

2) To prevent the risk of electric shock, do not open the case. Installation and maintenance should only be carried out by qualified technicians.

3) Do not use the product beyond the specified temperature, humidity or power supply specifications.

4) Please use a soft dry cloth to clean the camera. If the camera is very dirty, clean it with diluted neutral detergent; do not use any type of solvents, which may damage the surface.

Electrical Safety:

Installation and use of this product must strictly comply with local electrical safety standards.

Transportation:

Avoid any stress, vibration, or moisture during transportation, storage, installation and operation

Installation:

1) Do not rotate the camera head violently, otherwise it may cause mechanical failure;

2) This product should be placed on a stable desktop or other horizontal surface. Do not install the product obliquely, otherwise it may display inclined image;

3) Ensure there are no obstacles within rotation range of the holder.

4) Do not power on before completely installation.

Do Not Dismantle Camera：

We are not responsible for any unauthorized modification or dismantling.

Magnetic Interference

Electromagnetic fields at specific frequencies may affect the video image. This product is Class A. It may cause radio interference in household application. Appropriate measure is required.

Contents

1. Quick Start 6
1.1 Product Overview 6
1.2 Power-on Self-test 6
1.2.1 Power on 6
1.2.2 Self-test 6
1.3 Video Outputs 7
1.3.1 IP Network Output 7
1.3.2 HDMI Output 7
1.3.3 SDI Output 7
1.3.4 USB2.0 Output 7
1.4 Installation 7
2. Product Overview 10
2.1 Product Introduction 10
2.1.1 Dimension 10
2.1.2 Accessory 10
2.2 Product Features 11
2.3 Technical Specification 12
2.4 Interface Description 15
2.4.1 Back Panel 15
2.4.2 RS-232 15
3. How to Use 18
3.1 Video Output 18
3.1.1 Power-On Initial Configuration 18
3.1.2 Video Output 18
3.2 Remote Control 18
3.2.1 IR Remote Control 19
3.2.2 Remote Control Usage 21
3.3 Menu Setting 23
3.3.1 Main Menu 23

3.3.2 System Setting 24
3.3.3 Camera Parameter Setting 25
3.3.4 P/T/Z 29
3.3.5 Video Format 30
3.3.6 Version 30
3.3.7 Restore Default 30
4. Network Connection 32
4.1 Connection Method 32
4.2 Camera Web Interface 35
4.2.1 Web Login 35
4.2.2 Preview 35
4.2.3 Configuration 35
4.2.4 Audio Configuration 36
4.2.5 Video configuration 36
4.2.6 Network configuration 40
4.2.7 System Configuration 42
4.2.8 Logout 44
5. Serial Communication Control 45
5.1 VISCA protocol list 45
5.1.1 Camera return command 45
5.1.2 Camera control command 46
5.1.3 Inquiry Command 53
5.2 Pelco-D Protocol Command List 56
5.3 Pelco-P Protocol Command List 58
6. Maintenance and Troubleshooting 60
6.1 Camera Maintenance 60
6.2 Unqualified Applications 60
6.3 Troubleshooting 60

1. Quick Start

1.1 Product Overview

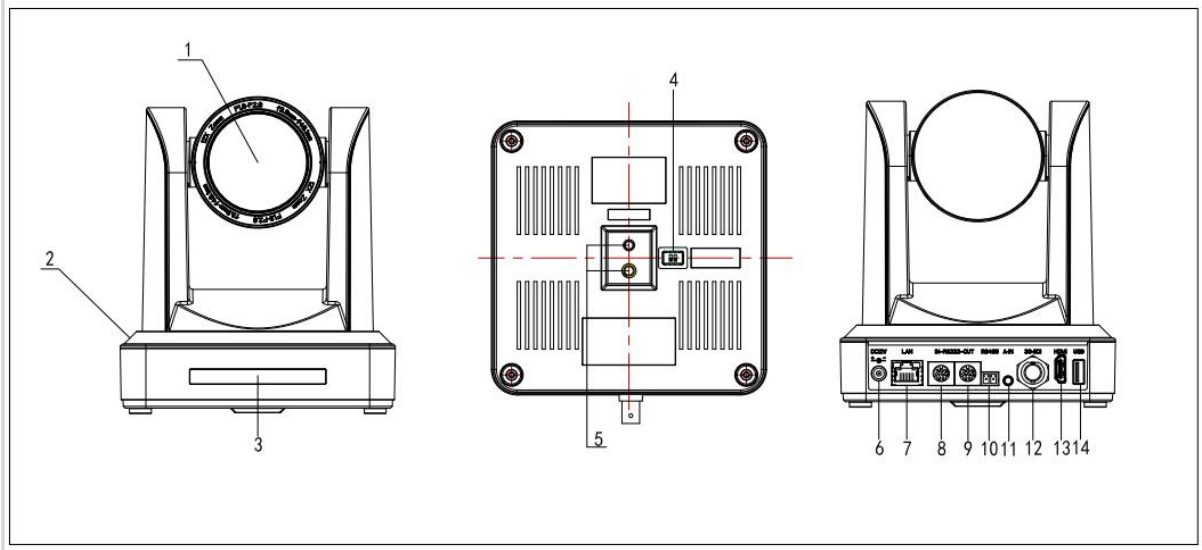

Figure1-1 Product Overview

Product Overview：

1, Lens	6, DC12V power jacket	11, Audio in
2, Camera Base	7, Network	12, SDI
3, Receiving Light	8, RS232 in jacket	13, HDMI
4, Bottom Dial Switch	9, RS232 out jacket	14, USB2.0
5, Tripod Screw Hole	10, RS485jacket	

1.2 Power-on Self-test

1.2.1 Power on

Connect to power socket via DV12V power adapter.

1.2.2 Self-test

After power on, the receiver light will start flashing and camera will do a brief pan-tilt tour and return to the home position. When light stop flashing, the self-test is finished.

Caution

- Default address of the remote control is 1#. When menu restore default setting, the address of IP remote control will restore 1#.
- If preset 0 is set, the camera will return to the preset 0 position after self-test

1.3 Video Outputs

1.3.1 IP Network Output

a. Network connection: Shown as diagram 1.1 #7

b. Log in: You can reach the Web Interface by typing in the camera's IP address(default 192.168.5.163) into a web browser. To log in, type in "admin" into the username and password fields. From the Web Interface, you can adjust many of your camera's settings via this IP interface.

1.3.2 HDMI Output

a. HDMI connection: Shown as diagram 1.1 #13

b. Connect camera to the display device via HDMI cable.

1.3.3 SDI Output

a. SDI Connection：Shown as diagram 1.1 #12

b. Connect camera to the display device via HDMI cable

1.3.4 USB2.0 Output

a. USB2.0 connection: Shown as diagram 1.1 #14. Open video software and select image device.

1.4 Installation

Caution

- Bracket can only be wall mounted or upside down mounted on template and concrete wall, but can not be installed on plasterboard.

1)Steps of wall mount

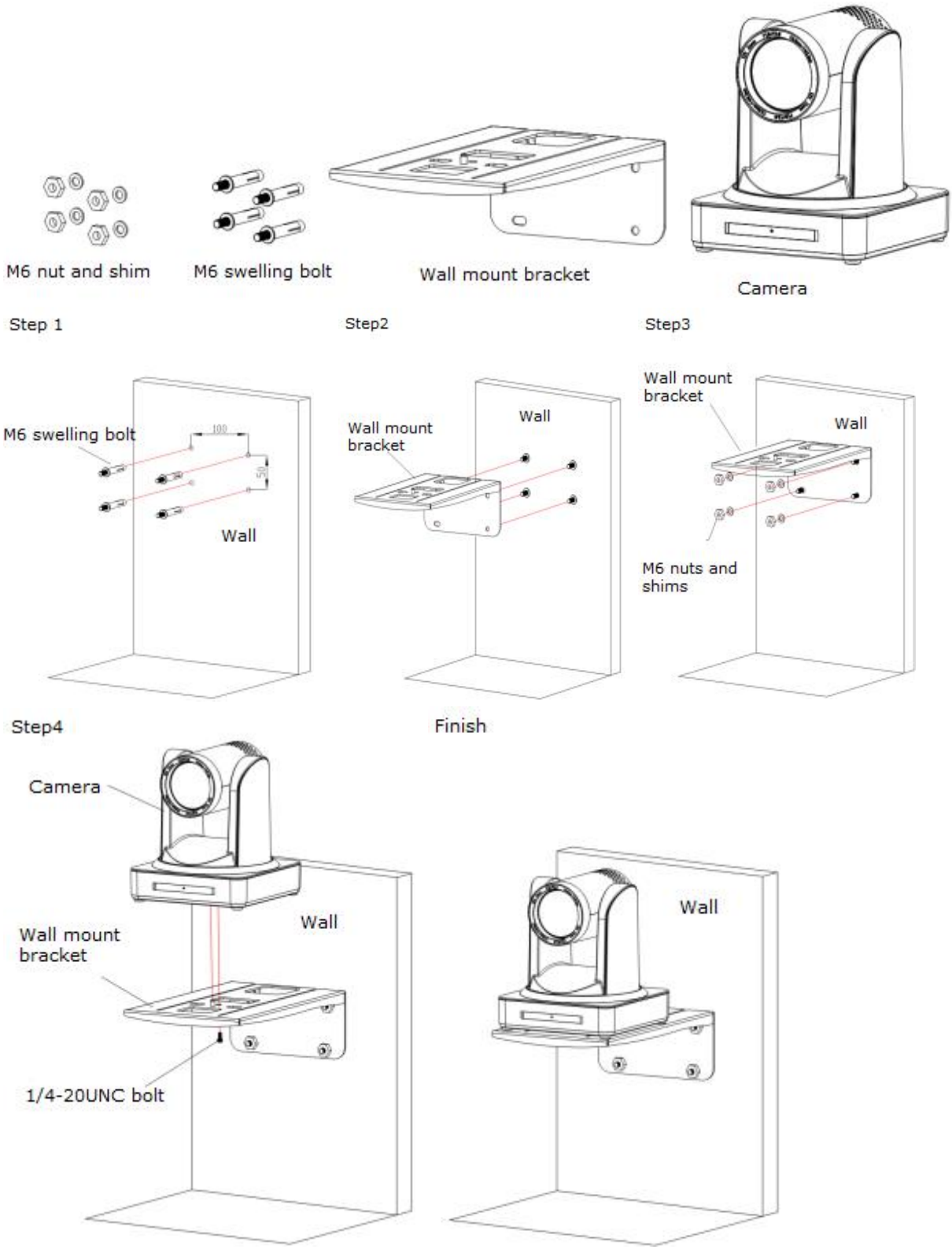

Figure1-2 Steps of wall mount

2)Steps of ceiling mount

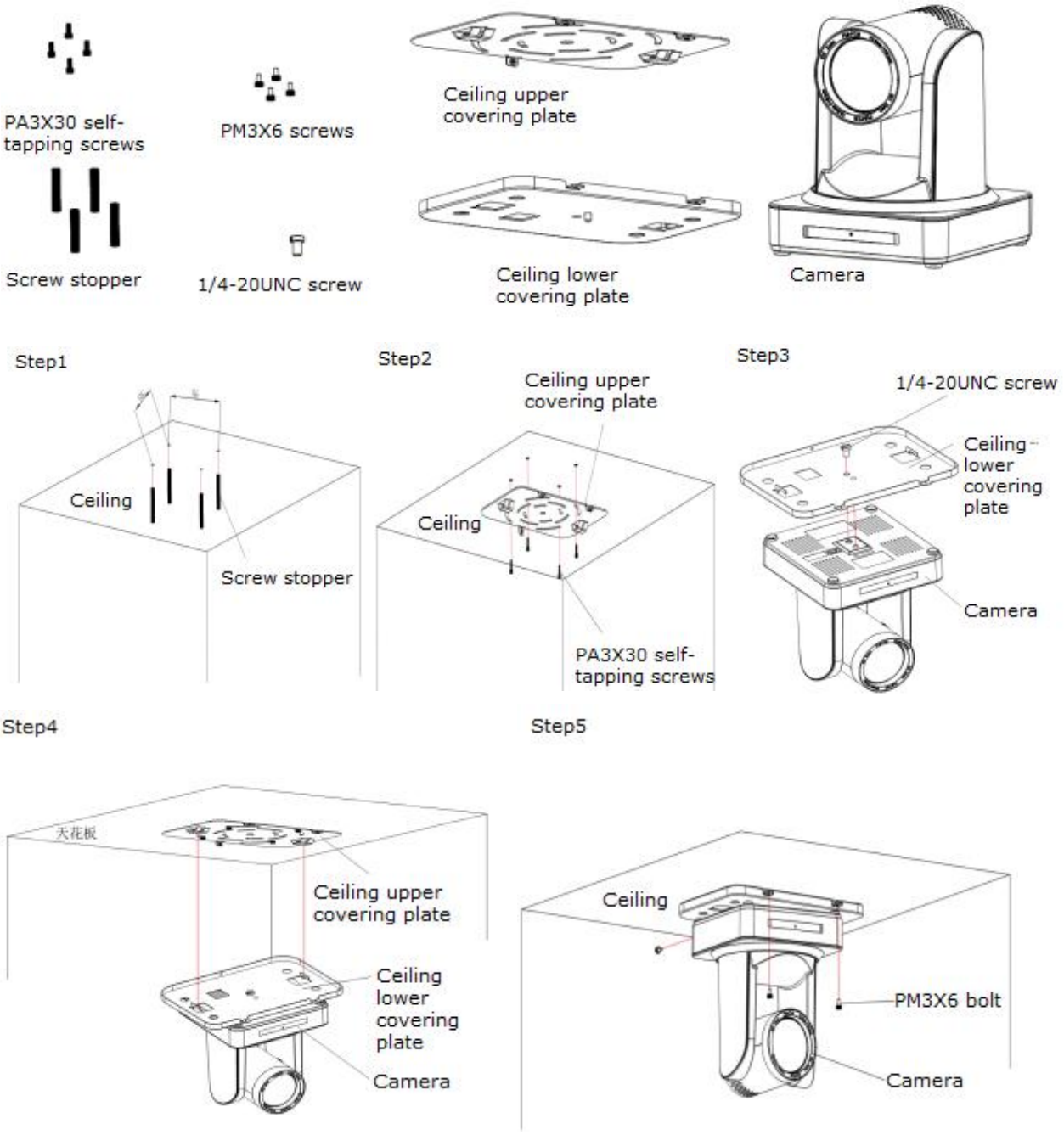

Figure1-3 Steps of ceiling mount

2. Product Overview

2.1 Product Introduction

2.1.1 Dimension

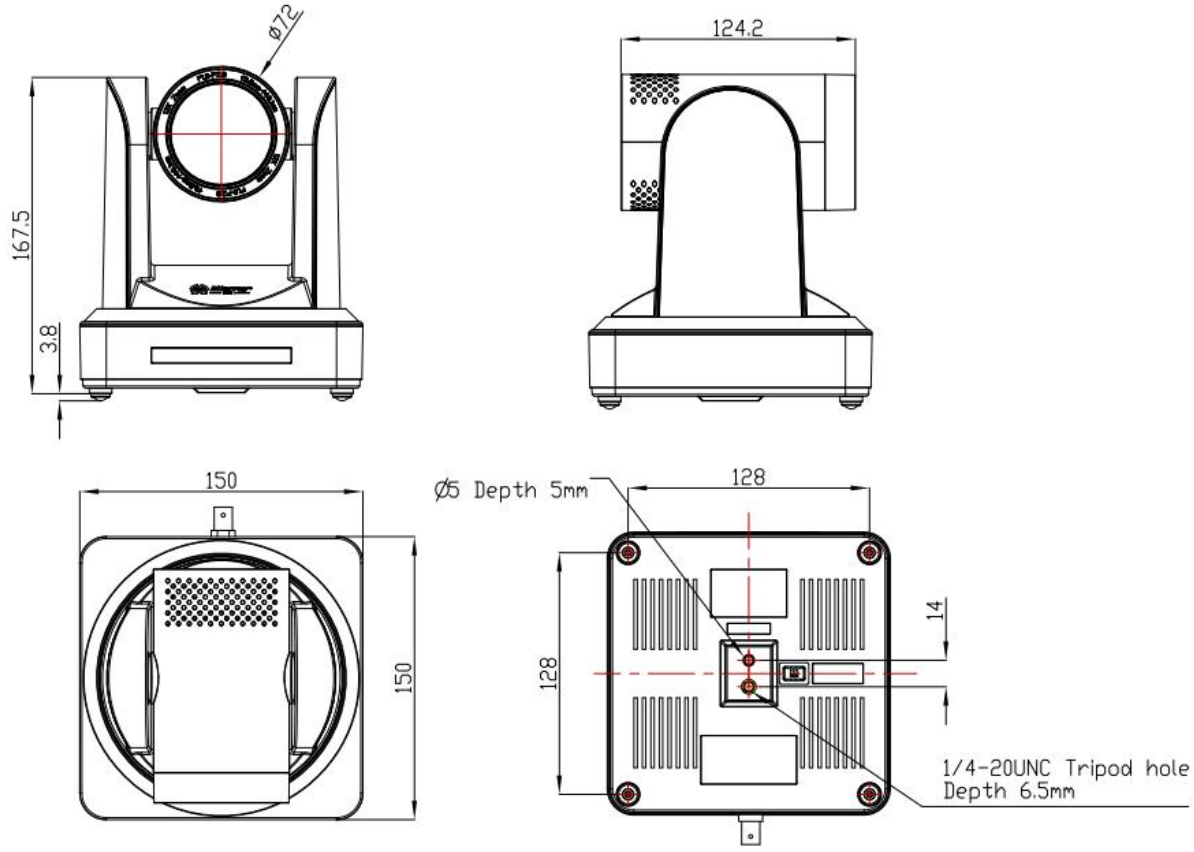

Figure1-4 Dimension

2.1.2 Accessory

When you unpack your package, check that all the supplied accessories are included:

Table1-1

Supplied	Power Adapter
	EU+US Standard Power Cable
	RS232 Cable
	USB Cable
	RS485 Terminal Block

	Remote Controller
	User Manual
Optional	Brackets for wall mounting
	Brackets for ceiling mount

2.2 Product Features

This series camera offers perfect functions, superior performance and rich interfaces. The features include advanced ISP processing algorithms to provide vivid images with a strong sense of depth, high resolution and fantastic color rendition. It supports H.265/H.264 encoding which makes motion video smooth even with less than ideal bandwidth conditions.

- **Superb High-definition Image:** It employs 1/2.8 inch high quality CMOS sensor. Resolution is up to 1920x1080 with frame rate at 60 fps.
- **Optical Zoom Lens:** It has 12X/20X optical zoom lens for options.
- **Leading Auto-focus Technology:** Boasting leading auto-focus algorithm, this camera can achieve auto focus with speed, accuracy, and stability.
- **Low Noise and High SNR:** Low Noise CMOS effectively ensure high SNR of video. Advanced 2D/3D noise reduction technology is used to further reduce the noise while ensuring image resolution.
- **Multi-Format Video Outputs:** It support HDMI, SDI, USB, LAN(POE for optional). If SDI, it supports for 100m transmission at 1080p60 format.
- **Multiple Audio Compression Format: It supports** H.265/H.264 in video compression and AAC, MP3, G.711A in audio compression. The resolution can reach up to 1920*1080 at 60 fps.
- **Audio Input:** It supports for AAC, MP3, G.711A audio encoding. AAC, MP3 encoding supports 16000, 32000, 44100, 48000 sampling frequency, and G.711A encoding only support 8000 sampling frequency.
- **Multiple Network Protocols:** It supports for ONVIF, GB/T28181, RTSP, RTMP protocols, RTMP push mode, easy to link with streaming media server(Wowza, FMS)
- **Multiple Control Jacket:** RS485, RS232；RS232, supporting for cascading, convenient to set up.
- **Support Multiple Control Protocol:** Support VISCA, PELCO-D, PELCO-P protocols, which can also be automatically recognized.
- **Low-power Sleep Mode:** Power consumption is less than 400mW in sleep mode.

- **Multiple presets:** User can set 255 presets (remote control can call out 10)
- **Multiple Remote Controls:** There are IR remoter and 2.4G wireless remote for options. The 2.4G wireless remote controller will not be affected by angle, distance or IR interference.
- **Wide Application:** Tele-education, Lecture capture, Webcasting, Videoconferencing, Tele-training, Tele-medicine, Interrogation and Emergency command systems.

2.3 Technical Specification

Parameters		
Image Sensor	1/2.8 inch high quality HD CMOS sensor	
Effective Pixel	2.07M, 16：9	
Video Format	HDMI/SDI Video Output 1080P60/50/30/25/59.94/29.97；1080I60/50/59.94； 720P60/50/59.94/ USB 2.0 Video Output 320x240/352x288/640x360/640x480/704x576/704x480/720x576/800x448/800x600/960x540/1024x576/1024x768/1280x720/1920x1080P30/25/20/15/10/5	
Optical Lens	12X f=4.1～49.2mm	20X f＝5.05～91.49mm
Viewing Angle	6.57°（N）70.28°（W）	3.45°（N）60.04°（W）
Iris	F1.8 – F2.68	F1.8 – F2.9
Digital Zoom	10 X	
Minimum Illumination	0.5Lux(F1.8, AGC ON)	
DNR	2D & 3D	
White Balance	Auto/Manual/One-push/3000K/3500K/4000K/4500K/5000K/5500K/6000K/6500K/70000K	

Focus	Auto/Manual/One-push
Iris	Auto/Manual
Electronic Shutter	Auto/Manual
BLC(Backlight Compensation)	On/Off
Dynamic Range	Off/ Dynamic level adjustment
Video Adjustment	Brightness, Contrast, Sharpness, Horizontal Flip, Vertical Flip, Black and White Mode, Gamma Curve, Electronic Zoom, DCI, Ultra Low Light Mode
SNR	>55dB

Interface	
Interface	SDI, HDMI, LAN(POE), RS232（loop in/out）, RS485, A-IN, U2
Video output	HDMI, SDI, LAN, USB2.0
Image Streaming	Dual streaming output
Video compression formats	H.265, H.264 USB 2.0：MJPG、H264、H.265、YUY2、NV12
Audio In Jacket	A-IN：Dual audio channel 3.5mm linear input
Audio compression format	AAC, MP3, G.711A
Network Jacket	100M（10/100BASE-TX）
Network Protocols	RTSP, RTMP, ONVIF, GB/T28181；Support network VISCA control protocols, remote upgrade, remote restart, and remote reset.
Control Jackets	RS232（loop in/out）, RS485
Control Protocols	Protocols：VISCA/Pelco-D/Pelco-P；Baud Rate：

	115200/38400/9600/4800/2400
Power Jacket	HEC3800 power socket(DC12V)
Power Adapter	Input: AC110V-AC220V Output: DC12V/1.5A
Input Voltage	DC12V±10%
Input Currency	1A（Max）
Power Consumption	12W(Max)

PTZ	
Pan	-170° ~ +170°
Tilt	-30° ~ +90°
Pan Speed	0.1 ~60°/s
Tilt Speed	0.1 ~ 30°/s
Preset Speed	Pan：60°/s, Tilt：30°/s
Preset Quantity	User can set 255 presets (10 via IR remote control)

Others	
Storage Temperature	-10℃ ~ +60℃
Storage Humidity	20% ~ 95%
Working Temperature	-10℃ ~ +50℃
Working Humidity	20% ~ 80%
Dimension	150mmX150mmX167.5mm
Weight	1.4kg

Environment	Indoors

Accessory	
Supplied Accessories	12V/1.5A power supply, RS232 cable, IR remote control, User Manual
Optional Accessories	Mounting Brackets

2.4 Interface Description

2.4.1 Back Panel

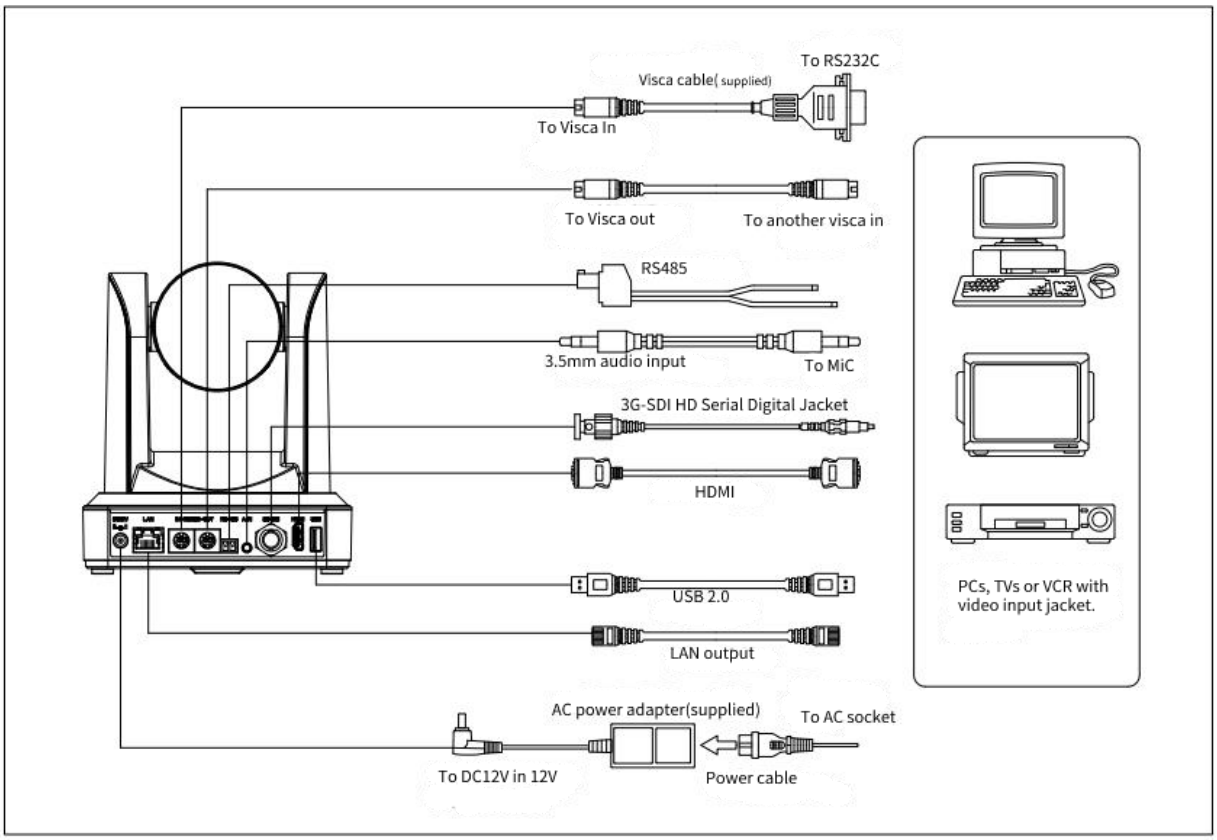

Figure1-5 Back Panel Image

2.4.2 RS-232

1) RS-232

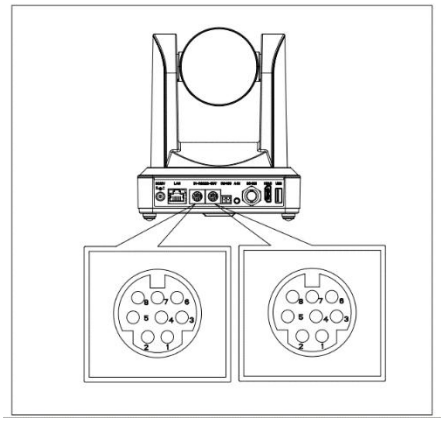

Connection method for PC and controller

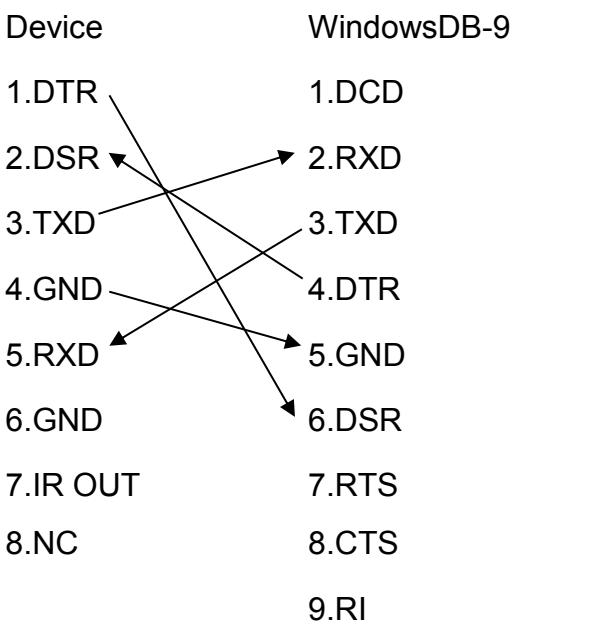



Figure1-6

2) RS-232 Mini-DIN 8-pin Definition

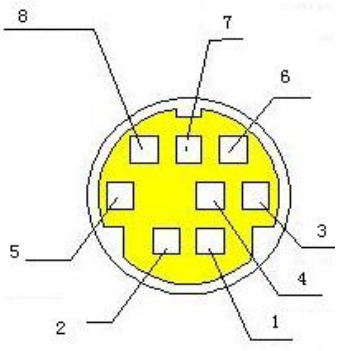

NO.	Port	Definition
1	DTR	Data Terminal Ready
2	DSR	Data Set Ready
3	TXD	Transmit Data
4	GND	System Ground
5	RXD	Receive Data
6	GND	System Ground
7	IR OUT	IR Commander Signal
8	NC	No Connection

3) RS232 (DB9) Port Definition

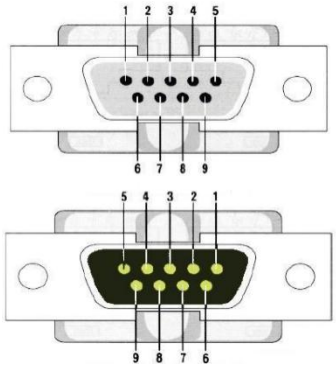

NO.	Port	Definition
1	DCD	Data Carrier Detect
2	RXD	Receive Data
3	TXD	Transmit Data
4	DTR	Data Terminal Ready
5	GND	System Ground
6	DSR	Data Set Ready
7	RTS	Request to Send
8	CTS	Clear to Send
9	RI	Ring Indicator

4) VISCA networking shown as below:

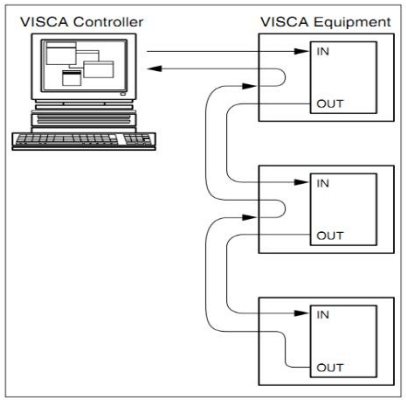

Camera cascade connection method

Device 1	Device 2
1.DTR	1.DTR
2.DSR	2.DSR
3.TXD	3.TXD
4.GND	4.GND
5.RXD	5.RXD
6.GND	6.GND
7.IR OUT	7.OPEN
8. NC	8.OPEN

3. How to Use

3.1 Video Output

3.1.1 Power-On Initial Configuration

After powering on, camera will have initial configuration and receiver light will be flashing. Camera will do a brief pan-tilt tour and return to the home position, or if preset 0 is set, the camera will return to the preset 0 position)

3.1.2 Video Output

1) Network output: connect this product and your computer through network cable, then open the browser, enter the camera IP address (factory default 192.168.5.163) in the address bar, then to the login page and input a user name and password (factory default are “admin”) , Finally enter the preview page, and the image comes out.

Caution

- If you forget your user name, password, IP address, you can manually restore the default by the remote controller key combination * #

---

2) SDI, HDMI output: Connect the monitor with the corresponding video output interface.

3) USB2.0 output: Connect this product with computer USB2.0 interface, open the Device Manager to see whether there is an image device and whether the Universal Serial Bus controllers recognize USB2.0 device. After properly identified, open the software, choose the image device and then it will output image.

3.2 Remote Control

Remote control using instruction: There are wireless remote control and IR remote control for options.

Steps for wireless remote control usage are as below:

1) Code Pairing

Press the "Settings" + "*" button for 3 seconds, the LED will turn off to flashing, after releasing the button, the LED light will keep flashing to start the code pairing, the receiver is powered on, and the LED will be off when the code pairing is successful; If you use other remote control, you need to clear the code of this remote control, or

re-pair the code of the new remote control. If the code pairing has been unsuccessful, the red LED light flashes for 20 seconds and then goes out, stop the code pairing and go to sleep; at this time, press any key to wake up and re-pair the code.

Caution

- After the code is successfully matched, you need to select the camera address to control it

2) Clear Code Data

Press the "Settings" key + "#" key from light off to flashing, the receiving end is powered off and then powered on. The LED is off, indicating that the paired data is cleared successfully

3) Enter Sleep Mode and Wake Up

If there is no operation in the working state, it will immediately enter the sleep mode, and press any key to wake up.

3.2.1 IR Remote Control



1. Standby Key

After 3S long press, the camera will step into standby mode. Long press 3S again, the camera will self-test again and back to HOME position. (Note: If power-on mode is turned on and Preset 0 is set, and there is no operation within 12s, it will automatically point to the specified preset position.

2. Camera Address Selection

Select the camera address which wants to be controlled

3. Number Key

Set or run 0-9 presets

4, *, # Key

Key combination use

5. Focus Control Key

Auto Focus: Enter into auto focus mode.

Manual Focus: The camera focus mode is manual

Switch the camera focus mode to manual focus by pressing [focus +] or [focus -] to adjust.

6. Zoom Control Key

Zoom + :Lens near

Zoom - :Lens far

7. Set or Clear Preset key:

Set Preset: Set preset key + 0-9 number key:

Clear Preset key: Clear preset key + 0-9 number key

8. Pan/Tilt Control Key

Press ▲Key :Up

Press ▼Key :Down

Press ◄Key :Left

Press ►Key: Right

“HOME” Key: Return to the middle position or enter into the next level menu

9. BLC Control Key

Back Light ON / OFF: Turn on or off the back light

10. Menu Setting

Open or close the OSD menu

Enter / exit the OSD menu or return to the previous menu.

11. Camera IR Remote Control Address Setting

【*】+【＃】+【F1】:Camera Address No.1

【*】+【＃】+【F2】:Camera Address No. 2

【*】+【＃】+【F3】:Camera Address No. 3

【*】+【＃】+【F4】:Camera Address No. 4

12. Key Combination Functions

1) 【#】+【#】+【#】:Clear all presets

2) 【*】+【#】+【6】:Restore factory defaults

3) 【*】+【#】+【9】:Flip switch

4) 【*】+【#】+Auto: Enter into the aging mode

5) 【*】+【#】+【3】:Menu set to Chinese

6) 【*】+【#】+【4】:Menu set to English

7) 【*】+【#】+Manual: Restore the default user name, password, and IP address

8) 【#】+【#】+【0】:Switch the video format to 1080P60

9)【#】+【#】+【1】: Switch the video format to 1080P50

10)【#】+【#】+【2】:Switch the video format to 1080I60

11)【#】+【#】+【3】:Switch the video format to 1080I50

13)【#】+【#】+【5】:Switch the video format to 720P50

14)【#】+【#】+【6】:Switch the video format to 1080P30

15)【#】+【#】+【7】:Switch the video format to 1080P25

16)【#】+【#】+【8】:Switch the video format to 720P30

17)【#】+【#】+【9】:Switch the video format to 720P25

3.2.2 Remote Control Usage

Finishing initialization, it can receive and execute the IR commands. Press the remote controller button, the indicator light is flashing; release the button, the indicator light stops flashing. Users can control the pan/tilt/zoom, setting and running preset positions via the IR remote controller.

Key Instruction:

1. In this instruction, “press the key” means a click rather than a long-press, and a special note will be given if a long-press for more than one second is required.

2. When a key-combination is required, do it in sequence. For example, “ 【 *】+【#】+【F1】”means press“【*】”first and then press“【#】” and last press“【F1】”

1) Camera Selection



Select the camera address to control.

2) Pan/Tilt Control



Up: press ▲ Down: press ▼

Left: press ◄ Right: press ►

Back to middle position: press“【HOME】”

Press and hold the up/down/left/right key, the pan/tilt will keep running, from slow to fast, until it runs to the endpoint; the pan/tilt running stops as soon as the key is released.

3) Zoom Control

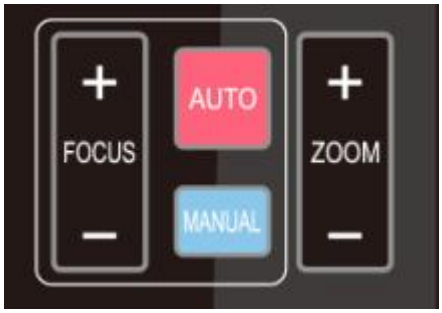

ZOOM IN: press “ZOOM ▲“ key

ZOOM OUT: press “ZOOM ▼” key

Press and hold the key, the camera will keep zooming in or zooming out and stops as soon as the key is released.

4) Focus Control

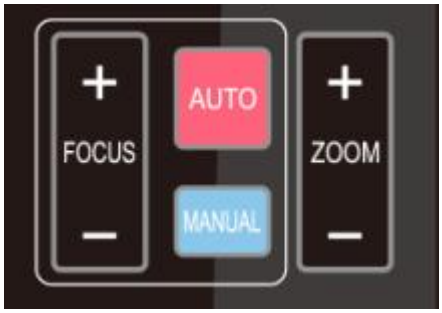

Focus (near):Press “【focus+】” key (Valid only in manual focus mode)

Focus (far): Press “【focus-】”key (Valid only in manual focus mode)

Auto Focus: Support

Manual Focus: Support

Press and hold the key, the action of focus will keep continue and stops as soon as the key is released.

5) BLC Setting



BLC ON / OFF: support

6) Presets Setting, Running, Clearing





1.Preset setting: to set a preset position, the users should press the “【SET PRESET】” key first and then press the number key 0-9 to set a relative preset,

Note: 10 preset positions in total are available by remote controller.

2. Preset Running: Press a number key 0-9 directly to run a relative preset.

Note: Action in vain if a relative preset position is not existed.

3. Preset clearing : to clear a preset position, the user can press the “【CLEAR PRESET】” key first and then press the number key 0-9 to clear the relative preset;

Note : press the“【#】” key three times continually to cancel all the presets.

7) Camera Remote Controller Address Setting

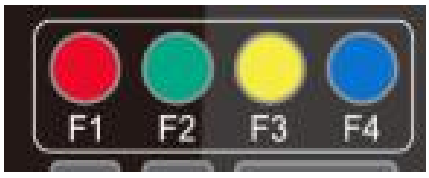

【*】+【＃】+【F1】:Camera Address No.1

【*】+【＃】+【F2】:Camera Address No. 2

【*】+【＃】+【F3】:Camera Address No. 3

【*】+【＃】+【F4】:Camera Address No. 4

3.3 Menu Setting

3.3.1 Main Menu

In normal working mode, press 【MENU】key to display the menu, using scroll arrow to point at or highlight the selected items.

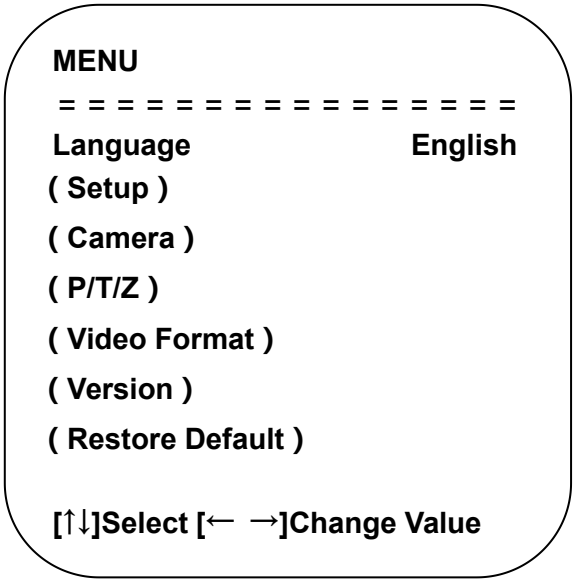

LANGUAGE: Language setting,
Chinese / English

SETUP: System setting

CAMERA OPTION: Camera setting

VERSON: camera version setting

Restore Default: Reset setting

3.3.2 System Setting

Move the pointer to the (Setup) in the Main Menu, click the【HOME】key and enter into the (System Setting) as shown below,

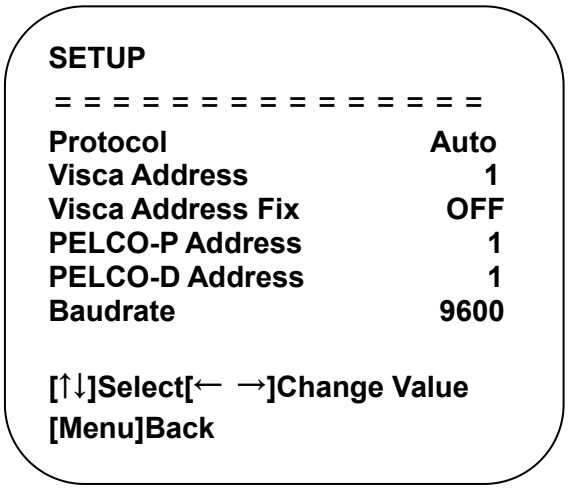

PROTOCOL: VISCA/Pelco-P/Pelco-D/Auto

Visca ADDR: VISCA=1~7 Pelco-P=1~255
Pelco-D = 1~255

Baud rate: 2400/4800/9600/115200

Visca Address Fix: On/Off

3.3.3 Camera Parameter Setting

Move the pointer to the (CAMERA) in the Main Menu, click the【HOME】key and enter the (CAMERA) as follow

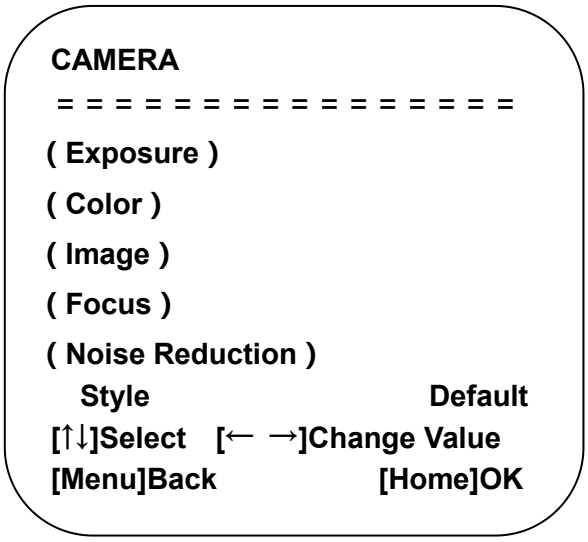

Exposure: Enter into Exposure setting

Color: Enter into color setting

Image: Enter into image setting

Focus: Enter into focus setting

Noise Reduction: Enter into noise reduction

1) Exposure

Move the pointer to the (EXPOSURE) in the Main Menu, click the【HOME】and enter the (EXPOSURE SET) as follow

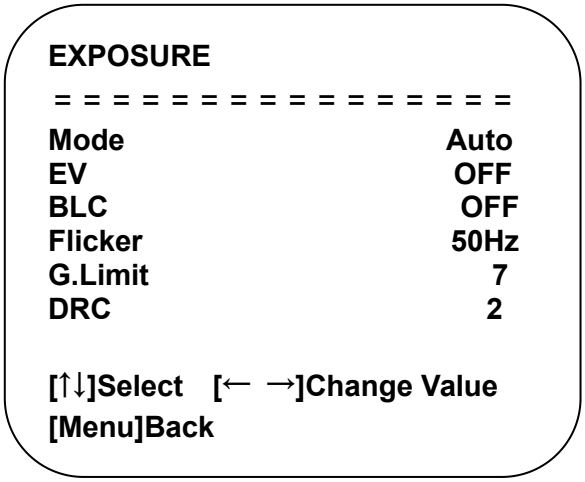

Mode : Auto, Manual, Shutter priority, Iris priority and Brightness priority.

EV : On/Off (only available in auto mode)

Compensation Level: -7~7 (only available in auto mode when EV is ON)

BLC: ON/OFF for options (only available in auto mode)

Anti-Flicker: OFF/50Hz/60Hz for options (only available in Auto/Iris **priority**/Brightness **priority** modes)

Gain Limit: 0~20(only available in Auto/ Iris **priority** /Brightness **priority** mode)

WDR: Off, 1~8

Shutter :1/25, 1/30, 1/50, 1/60, 1/90, 1/100, 1/120, 1/180, 1/250, 1/350, 1/500, 1/1000, 1/2000, 1/3000, 1/4000, 1/6000, 1/10000(only available in Manual and Shutter priority mode)

IRIS :OFF, F11.0, F9.6, F8.0, F6.8, F5.6, F4.8, F4.0, F3.4, F2.8, F2.4, F2.0, F1.8(only available in Manual and Iris priority mode)

Brightness: 0~23 (only available in Brightness **priority** mode)

2) Color

Move the pointer to the (COLOR) in the Main Menu, click the【HOME】and enter the (COLOR SET) as follow

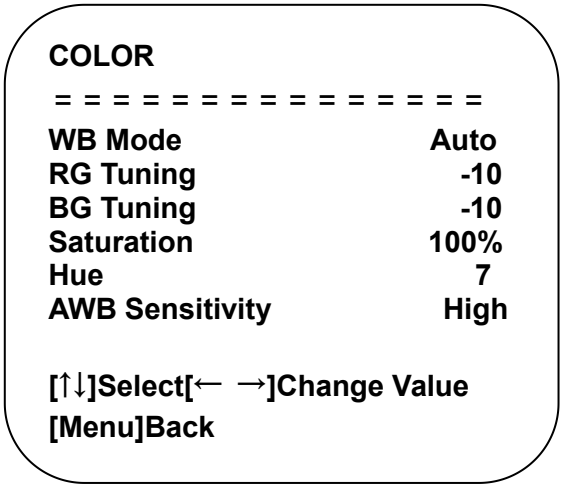

WBMode: Auto, Manual, One Push, 3000K/3500K/4000K/4500K/5000K/5500K/6000K/6500K/70000K.

Red Tuning: -10~10(only available in Manual mode)

Blue Tuning: -10~10(only available in Manual mode)

Red Gain: 0~255(only available in Manual mode)

Blue Gain: 0~255(only available in Manual mode)

Saturation: 60%, 70%, 80%, 90%, 100%, 110%, 120%, 130%, 140%, 150%, 160%, 170%, 180%, 190%, 200%

Hue: 0~14

AWB Sensitivity: high/middle/low(only available in Auto mode)

Hue: 0-14

3) Image

Move the pointer to the (IMAGE) in the Menu, click the【HOME】and enter the (IMAGE) as follow

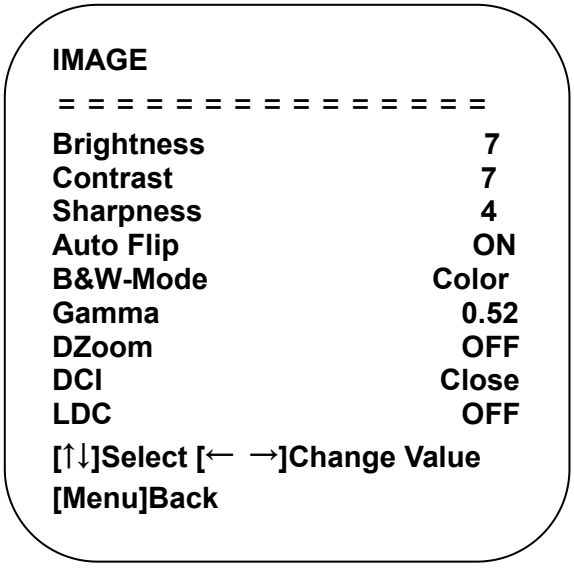

Brightness: 0~14

Contrast: 0~14

Sharpness: 0~15

Flip-H: On/Off

Flip-V: On/Off

B&W Mode: color, black/white

Gamma: default, 0.47, 0.50, 0.52, 0.55

DZoom: digital zoom options: On/Off

DCI: Dynamic Contrast: Off, 1 ~ 8

Low Light Mode: On/Off

4) Focus

Move the pointer to the (FOCUS) in the Menu, click the【HOME】and enter the (FOCUS) as follow

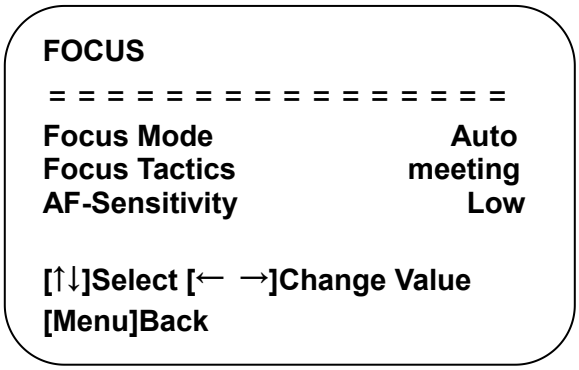

Focus Mode: Auto, manual

AF-Zone: Up, middle, down, all

AF-Sensitivity: High, middle, low

5) Noise Reduction

Move the pointer to the (NOISE REDUCTION) in the Menu, click the【HOME】and enter the (NOISE REDUCTION) as follow

```
NOISE REDUCTION
= = = = = = = = = = = = = = = =
NR-2D                          3
NR-3D                          3
Dynamic Hot Pixel              4

[↑↓]Select [← →]Change Value
[Menu]Back
```

2D Noise Reduction: Auto, close, 1~7

3D Noise Reduction: Close, 1~8

Dynamic Hot Pixel: Close, 1~5

3.3.4 P/T/Z

Move the pointer to the (P/T/Z) in the Main Menu, click the【HOME】and enter the (P/T/Z) as follow

```
P/T/Z
= = = = = = = = = = = = = = = =
Speed by zoom                 ON
Zoom speed                     8
Image Freezing               OFF
Acc Curve                   Slow
Preset speed                  10

[↑↓]Select [← →]Change Value
[Menu]Back
```

Depth of Field: Only effective for remote controller, On/ Off;

When zoom in, the Pan/Tilt control speed by remoter will become slow

Zoom Speed: Set the zoom speed for remote controller, 1~8

Image Freezing: On/Off

Accelerating Curve: Fast/slow

Preset Speed: 1-10

3.3.5 Video Format

Move the pointer to the (Video Format) in the Menu, click the【HOME】and enter the (Video Format) as follow

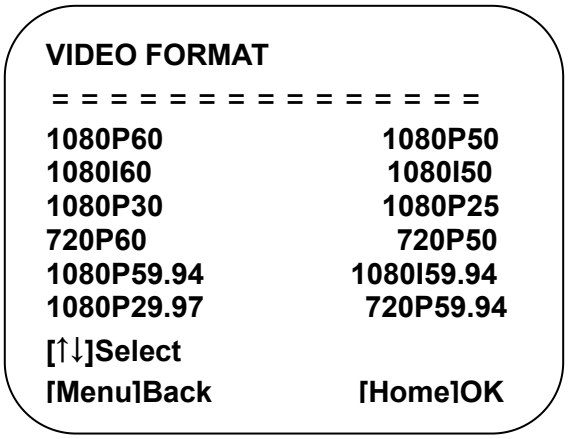

Caution

- Exit menu after modifying parameter to save it

3.3.6 Version

Move the pointer to the (VERSION) in the Main Menu, click the【HOME】and enter the (VERSION) as follow

MCU Version: Display MCU version information

Camera Version: Display camera version information

AF Version: Display the focus version information

3.3.7 Restore Default

Move the pointer to the (VERSION) in the Main Menu, click the【HOME】and enter the (VERSION) as follow

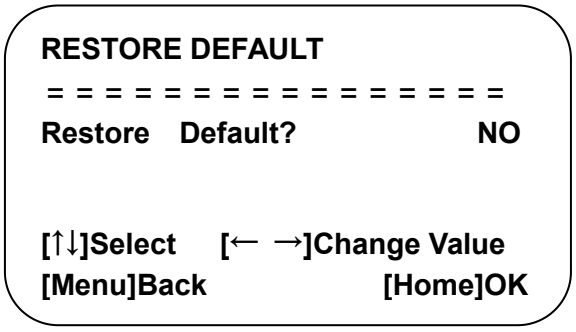

Restore default: Yes/no ;(after restoring default, the language, color, and video format won't be restored.

Caution

- If the address of former remoter is not 1 but another one from 2, 3, 4, the corresponding camera address will restore to 1 when all parameters or system parameters are restored. User should change the remoter address to be 1 (press No.1 according to the camera so to get normal operation)

---

4. Network Connection

4.1 Connection Method

Direct Connection：Direct connections via “cross-over” network cable

Connection to LAN：Connections to LAN via patch cable to LAN wall jack or LAN switch

---

Caution

- Please do not put the power and network cable in places where can be easily touched to prevent video quality lowered by unstable signal transmission due to poor contact of cables.

The computer must have the network segment where the camera IP address belongs to. The device will not be accessible if without the segment. I.E. The camera default IP address is 192.168.5.163, then segment 5 must be added in the computer. Specific steps are as below:

Firstly open the window of Local Area Connection Properties on computer, select the “Internet protocol version 4(TCP/IPv4)” as shown by picture on the left. Double click or click the property “Internet” protocol version 4 (TCP/IPv4)to enter into the Internet Protocol Version 4(TCP/IPv4) Properties window, select “Advanced” to enter into the Advanced TCP/IP Setting and add IP and subnet mask in the IP browser as picture shown below. Click the “Confirm” to finish the adding of IP segment. User can add the corresponding network segment according to the revised IP address of the camera.

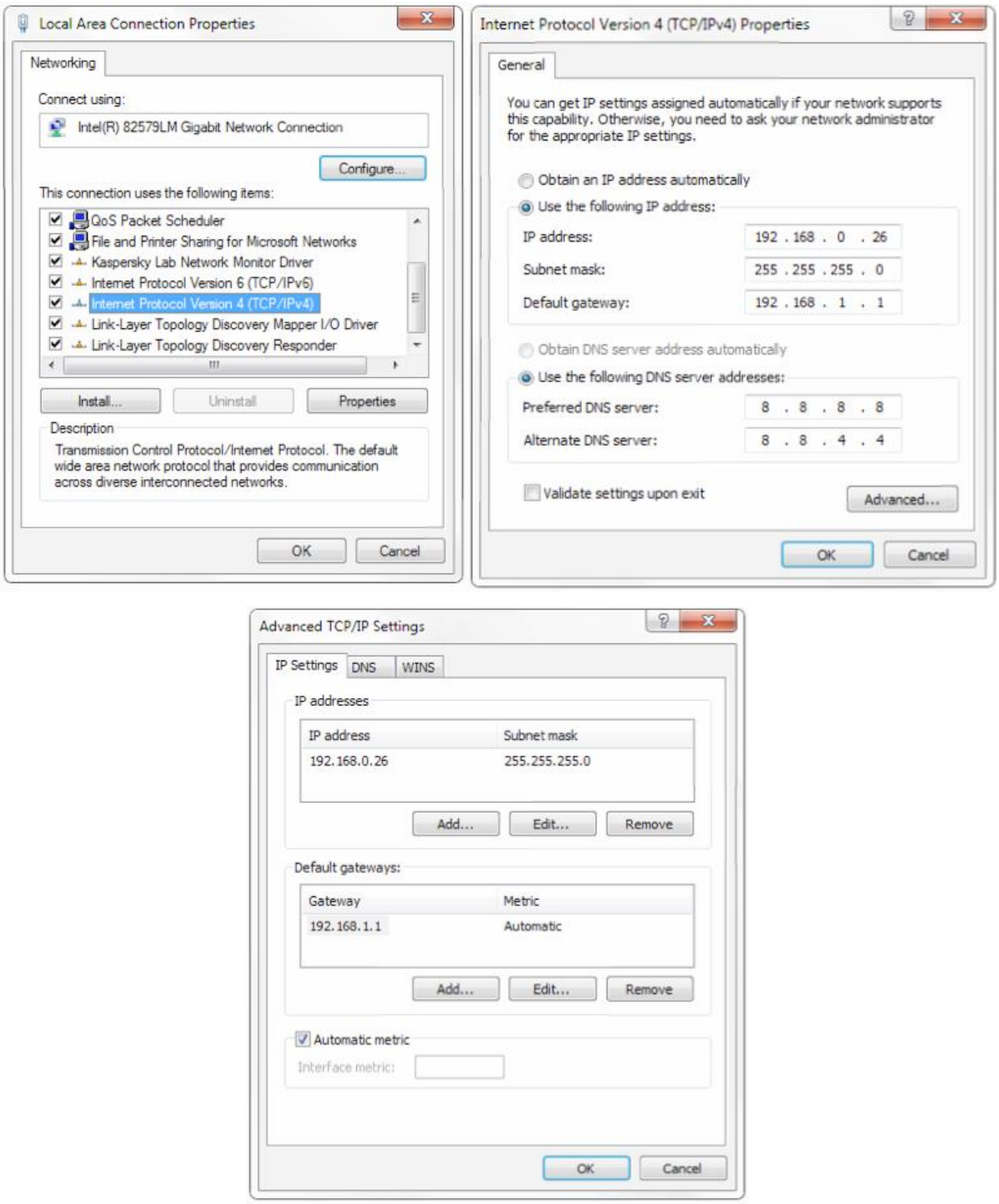

Caution

- The IP address to be added cannot be same with that of other computers or devices. The existence of this IP address needs to be verified before adding.

Click the “Start” and select “Operation” to input cmd as picture below to verify if the network segment has been successfully added.

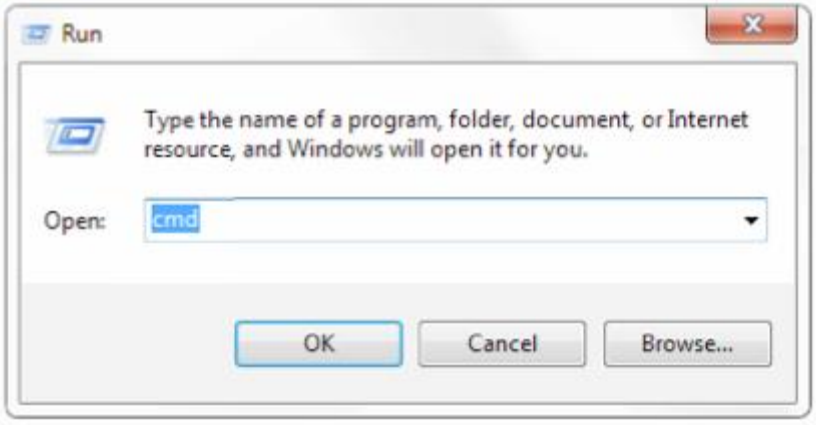

Click “OK” and open the DOS command window, input ping 192.168.5.26 and press Enter key, it will show message as below: which means network segment adding is succeed.

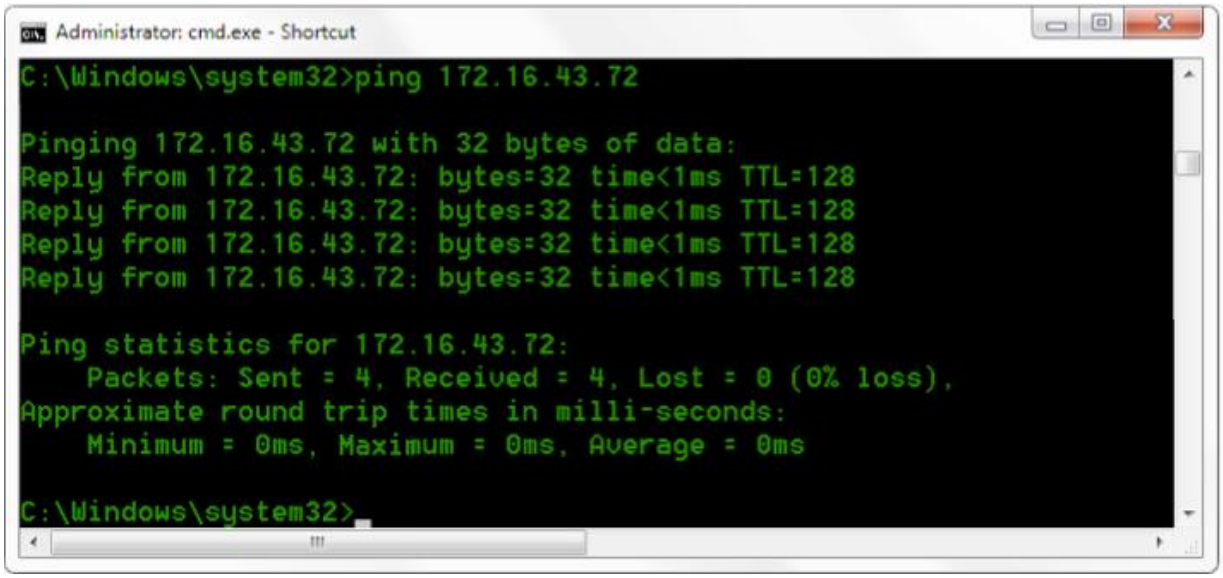

User can also to verify network connection as steps above mentioned after the finish of camera self-check. If IP is default, open DOS command window and input 192.168.5.163, then press Enter key. It will show message as below: which means network connection is normal.

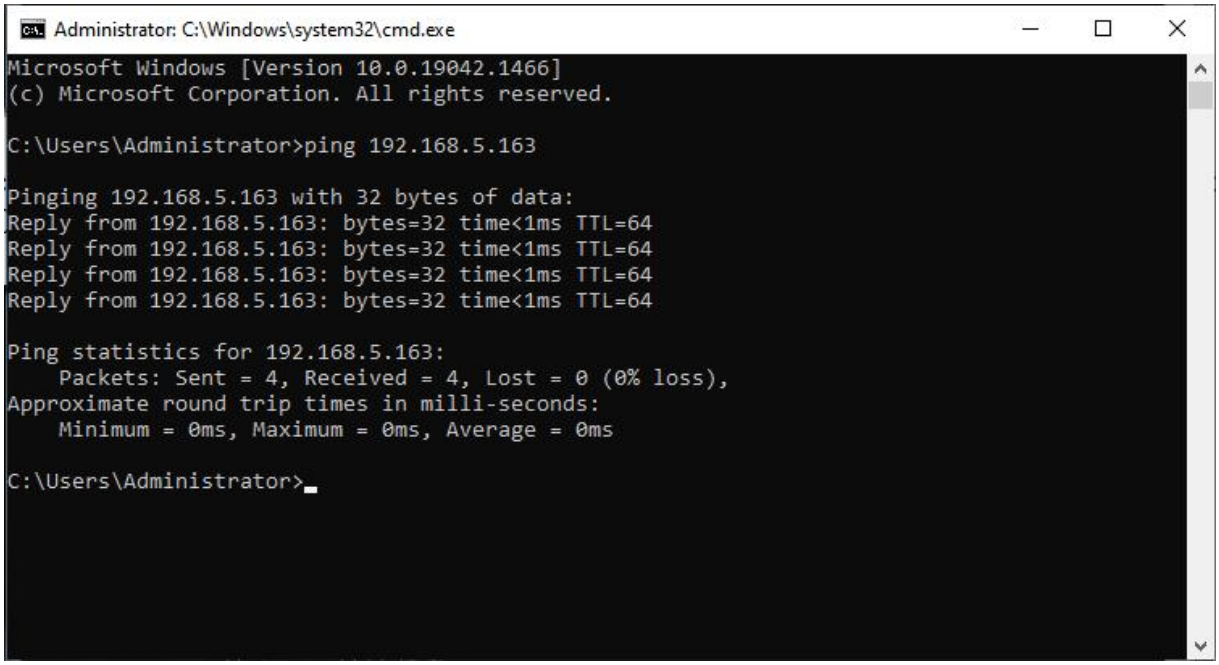

4.2 Camera Web Interface

4.2.1 Web Login

1) Web Login

After assigning an IP address to the camera, you can reach the Web Interface by typing in the camera's IP address into a web browser. You can log in this interface as administrator or user. If as administrator, type in "admin" into the username and password fields. If as user, type in "user1" or "user2" into the username and password fields. From the Web Interface, you can control the camera using the arrows on the left side. You can also adjust many of your camera's settings via this IP interface.

4.2.2 Preview

After successful login into the management interface, it enters the video preview interface. In the preview screen, users can control PTZ, zoom, focus, video capture, sound, focus, full screen and set the preset position, run, delete and other operations.

Caution

- There is no configuration right if you login as user

4.2.3 Configuration

Click **Configuration** to enter into the device parameters setting page

There are the following options: Audio configuration, video configuration, network configuration, internet access configuration, system configuration, detailed description see the following table.

Menu	Explanation
Audio configure	Including audio compressing format, sampling frequency, sampling precision, compressing code rate settings etc.
Video configure	Including video encoding, video parameters, character-overlapping, character size, video output setting etc.
Network configure	Including basic parameters, Ethernet, DNS, wireless network setting, GB28181 etc.
System configure	Including equipment property, system time, user management, version update, Reset, Reboot device settings etc.

4.2.4 Audio Configuration

Switch: Choose to enable the audio or not.

Encode Type: Set audio compressing format and the device will reboot automatically after change (default MP3, AAC, G.711A optional)

Sample Rate: Set sample rate and the device will reboot automatically after change (default 44100,16000,32000 and 48000 optional)

Sample Bits: Set sample bits (default 16bits)

Bits rate: Set audio compressing code rate (default 64kbps; 32,48,96,128 optional)

Channel: Set channel type (default Stereo, Mono optional)

Input Volume: Set input volume (default 4, 1~10 optional)

Note: Click "SAVE",it will remind Enable has changed. Restart the device to take effect after the success of the save,then please reboot the camera to make new setting effect.

4.2.5 Video configuration

1) Video Encoding

Code Stream: Stream: Different video output mode setting, use different streams. (Main stream, secondary stream)

Compression Format: Set the video compression format, save to take it effect (primary / secondary stream default:H.264, H.265 optional)

Profile: Profile Mode Setting (Default HP, BP、MP Optional)

Video Size: Set video image resolution, save to take it effect (main stream default 1920 * 1080 or 1280 * 720 optional; default secondary stream 640 * 320, 320 * 180, 1280 * 720, 1920 * 1080 optional)

Stream Rate Control: Set rate control mode, save to take it effect (Primary / secondary stream default variable bit rate, fixed rate is for option).

Image Quality: Set the image quality, image quality can be changed only when rate control is variable bit rate, (main stream defaulted is better, secondary stream default is not good, there are best, better, good, bad, worse, worst for options).

Rate (Kb / s): Set the video bit rate (main stream default 4096Kb / s, 64-12288Kb / s optional; secondary stream default 1024Kb / s, 64-10240Kb / s optional).

Frame Rate (F / S): Set the video frame rate (primary / secondary stream default 25F / S, primary stream 5-60F/S optional, secondary stream 5-30F / S optional).

Key Frame Interval: Set the key frame interval (primary / secondary stream default 75F, primary / stream 1-150F optional. secondary stream 1-150F optional).

Minimum QP of Key Frame Interval: Set minimum QP of key frame interval (Default 20, 10-51 for optional)

Stream Name: When streaming via rtsp or rtmp, user can modify stream name. Main Stream(live/av0), sub stream(live/av1)

Click the "Save" button to display the "Parameter saved successfully" message, then settings take effect.

2) Stream Release

Switch: To turn on/off the main / secondary stream.

Protocol: primary / secondary stream applies RTMP protocol.

Host Port: server port number (default 1935, 0-65535 optional)

Host Address: server IP addresses (default 192.168.5.11)

Stream Name: choose a different stream name (live / av0, live / av1 optional).

User: Set the user name.

Password: Set the password.

Click on the "Save" button to display the "Save successful" message, then settings take effect.

Method of obtaining RTSP: rtsp: // device IP address: 554 / live / av0 (av0 main stream; av1 secondary stream)

3) RTP Broadcasting

Main/Sub Stream : On/off ;

Protocol：RTP or TS

Address：Default 224.1.2.3. It can be edited.

Port：The main stream defaults to 4000, the secondary stream defaults to 4002, and the main/secondary stream is optional from 0 to 65535.

Visit：Address comes up after setting. Eg; rtp://224.1.2.3:4000；

udp://@224.1.2.3:4000；tcp://@224.1.2.3:4002；

4) Video Parameters

a, Focus: Focus mode, focus range, focus sensitivity can be set.

Focus Mode: set the focus mode (Default automatic, manual optional, one-key focus)

Focus range: set the focus range (the default middle, the upper, lower and all optional)

Focus Sensitivity: Set the focus sensitivity (default is low, high, medium optional)

b, Exposure: can set exposure mode, exposure compensation, backlight compensation, anti-flicker, gain limit, dynamic range, shutter, aperture, brightness, gain

Exposure Mode: Set the exposure mode (the default automatic, manual, shutter priority, aperture priority, Brightness priority optional)

Exposure compensation: Exposure compensation setting is active when it is auto status (default is off).

Exposure compensation value: Set the exposure compensation value, valid when it is set for auto(default 0, -7 to 7 optional).

BLC: Set back light compensation, valid when it is auto status (default is off).

Anti-flicker: Set up anti-flicker mode, valid when status of automatic, aperture or brightness priority (default 50Hz, closed, 60Hz optional).

Gain limit: set the gain limits, auto, active when it is status of aperture or brightness priority(default 3, 0-15 optional)

Dynamic range: set the dynamic range (default 5, 0-8 optional).

Shutter speed: active when it is status of manual or shutter-priority (default 1/100, 1/25、1/30、1/50、1/60、1/90、1/100、1/120、1/180、1/250、1/350、1/500、1/1000、1/2000、1/3000、1/4000、1/6000、1/10000 optional).

Aperture value: Set the aperture value, active when it is status of manual or aperture-priority(default F1.8, closed, F11, F9.6, F8.0, F6.8, F5.6, F4.8, F4.0, F3.4, F2 .8, F2.4, F2.0, F1.8 optional).

Brightness: Set the brightness value, active when it is a state of brightness priority (default 7, 0-23 optional).

Gain: setting value, only valid in manual exposure mode and shutter priority (default 0, 0~20 optional)

c, Color: White balance, saturation, color, white balance, sensitivity, color temperature, gain red and blue gain can be set.

White balance modes: Set the white balance mode (Default automatic, manual, one-key white balance, specified color temperature optional).Note: Click the “Correction” button when selected the One-push white balance mode.

Saturation: Set the saturation (default 80%, 60%, 70%, 80%, 90%, 100%, 110%, 120%, 130%, optional).

Auto white balance sensitivity: Sensitivity Auto white balance settings (default is low, high, medium optional).

Chroma: Set the chrome (default 7, 0-14 optional).

Color temperature: Set color temperature (Default setting: High, with low, middle for options)

Red gain: Set the red gain, effective when it is manual (default 255, 0-255 optional).

Blue gain: Sets the Blue gain, effective when it is manual (default 199, 0-255 optional).

d, Image: You can set brightness, contrast, sharpness, gamma curve, dynamic contrast, black and white mode, horizontal flip, vertical flip, electronic zoom, ultra-low illumination

Brightness: Set the brightness (default 6, 0-14 optional).

Contrast: set the contrast (default 8, 0-14 optional).

Sharpness: Set the sharpness value (default 6, 0-15 optional).

Black and white mode: Set black and white mode (default color, black/white optional).

Gamma: Gamma value setting (default, 0.45, 0.50, 0.52, 0.55 optional).

Flip Horizontal: Set Flip Horizontal (default Off, On optional).

Flip Vertical: Set vertical flip (default Off, On optional).

Low-Light Mode: Set Low-light mode (default off, on optional)

e. Noise Reduction: 2D noise reduction, 3D noise reduction and dynamic dead pixel correction available.

2D Noise Reduction: Set 2D noise reduction level (default Auto, 1-7 and Off optional).

3D Noise Reduction: Set 3D noise reduction level (default 3, 1-8 and Off optional).

Dynamic dead pixel correction: Set Dynamic dead pixel correction (default Off, 1-8 optional).

⚠ Caution

- Refresh the page after changing above parameters in a, b, c, d, e, f to take effect.

---

5) Character Size

Main stream character size: Set the character size of the display, the device will restart automatically after changed and saved (default 24, 24, 16 optional)

Secondary stream character size: Set the character size of the display, the device will restart automatically after changed and saved (default 16, 24, 16 optional)

Click on the "Save" button to display "Parameter saved successfully" message, set to take effect

6) Video output

Output Format: Set the video output format (default 1080P60, 1080P50, 1080P30, 1080P25, 1080I60, 1080I50, 720P60, 720P50, 720P30, 720P25, 1080P59.94, 1080I59.94, 1080P29.97, 720P59.94, 720P29.97 optional).

Click on the "Save" button, it will be valid when display "Save successful".

4.2.6 Network configuration

1) Network port

Data port: set the data port, the device will restart automatically after changed(default 3000, 0-65535 optional).

Web Port: Set Web port, the device will restart automatically after changed (default is 80, 0-65535 is optional).

Onvif Port: Set Onvif port, the device will restart automatically after changed(default 2000, 0-65535 optional).

Soap Port: Set Soap port (default 1936, 0-65535 optional).

RTMP Port: Set RTMP port (default 1935, 0-65535 optional).

RTSP Port: Set RTSP port, the device will restart automatically after changed (default 554, 0-65535 optional).

Visca Port: Set Visca port, the device will restart automatically after changed (default 3001, 0-65535 optional).

Click on the "Save" button, it will be valid when display "Save successful".

RTMP access: RTMP: / / equipment IP address: 1935 / live/av0 (av0 main stream; av1 second stream)

RTMP Access：rtmp://equipment IP address: 1935 / live/av0 (av0 main stream; av1 second stream)

2) Ethernet parameters

DHCP: Enable or disable obtain IP automatically can be set. Save changes and reboot the device to takes effect (Default:OFF)

IP Address: Set the IP address, save changes and reboot the device to takes effect (default 192.168.5.163).Note: This IP address is the same with the one used to login Web page.

Subnet Mask: Set the subnet mask (default 255.255.255.0).

Default Gateway: Set the default gateway (default 0.0.0.0).

Physical Address: Set the physical address (the parameter is read-only but can not be modified).

Click on the "Save" button, it will be valid when display "Save successful". (Note: To prevent IP conflicts When modify).

3) DNS parameters

Preferred DNS server: set the preferred DNS server. (Default 0.0.0.0).

Alternate DNS server: Alternate DNS server settings. (Default 0.0.0.0).

Click on the "Save" button, it will be valid when display "Save successful".

4) GB28181

Switch: set whether open GB28181, can check

Time Synchronization: whether synchronization time is set, you can check

Stream Type: stream type setting (the default main stream, secondary stream optional)

Sign effective time (in seconds): 3600 Range 5-65535

Heartbeat time (seconds): 60 Range 1-65535

Register ID: 34020000001320000001

Register User name: IPC

Register Password: 12345678

Equipment ownership: Users can add their own

Administrative regions: Users can add their own

Alarm Zone: Users can add their own

Equipment installation address: Users can add their own

Local SIP Port: 5060 Range 0-65535

GB28181 Server Address: IP address of the computer

Server SIP Port: 5060 Range 0-65535

Server ID: 34020000002000000001

Click on the "Save" button, it will be valid when display "Save successful".

5) SRT

SRT port: Set the SRT port (default 9000, 0-65535 optional)

SRT password: Set SRT password

SRT password length: Set the SRT password length (default 0, 16, 24, 32 optional)

Click the "Save" button, and the prompt message "Parameters saved successfully! It will take effect after restarting!" will be displayed. After setting, restart the camera to take effect.

6) RTSP

RTSP authentication, set RTSP authentication, default off, on optional

Click the "Save" button, and the prompt message "Save successfully! Modify RTSP authentication parameters will take effect after restarting the device!" will be displayed. After setting, restart the camera to take effect.

4.2.7 System Configuration

1) Device Properties

Device Name: Set the device name (the default Camera-1, user can add their own).

Device ID: Set the device ID (default 1, Read-Only).

System Language: Set the system language (default Simplified Chinese, English optional).Need to re-login after modify and save the setting.

Click on the "Save" button, it will be valid when display "Save successful".

2) System Time

Date Format: Set the date format (YYYY-MM-DD default that year - month - day, MM-DD-YYYY namely Month - Day - Year, DD-MM-YYYY date - month - year Optional).

Date separator: set the date separator (default '/', '.', '-' Optional).

Time Zone: Set the time zone (default East eight districts, other time zones optional).

Time Type: Set the time types (default 24 hours, optional 12 hours).

Time setting: Set time mode (to choose the computer time synchronization, NTP server time synchronization, or set manually).

Computer Time: Set the computer synchronization valid.

Update interval: Set the NTP server automatic updated time interval. Valid after setting NTP server synchronization (default one day, 2-10 days Optional).

NTP server address or domain name: Set NTP server address or domain name (default time.nits.gov). Valid after setting NTP server synchronization.

NTP Server Port: Sets the NTP server port (default 123).Valid after setting NTP server synchronization.

Set the time manually, Effective when set manually.

Click on the "Save" button, it will be valid when display "Save successful".

3) User Management

Select users: Set the user type (the default administrator, Common User 1, Common User 2 optional)

User name: set the user name (Select User Administrator default admin; select a common user1 default user1; to select a common user 2 default user2; user can modify their own)

Password: Set a password (Select User Administrator default admin; select a common user1 default user1; to select a common user 2 default user2; user can modify their own).

Password confirmation: Confirm the input passwords are the same or not.

Click on the "Save" button to display the "Save successfully" message, then the set is to take effect.



- Please note the case-sensitivity of the user name and password.
- If login page by a common user’s name and password, one does not have configuration privileges but can only operate to preview, logoff.

---

4) Version Upgrade

MCU version V2.0.0.16 2015-12-18

Camera version V2.0.0.16 2015-12-18

Focus version V2.0.0.6 2015-12-11

Users only read the version information above which is consistent with the menu version but cannot modify. Different types of the machine has different information.

Update file:

Click "Browse ..." installation, to select the upgrade file in the pop-up window.

Click on the "Upgrade" button, the upgrade dialog will appear. The device will reboot automatically after update successfully.

Caution

- Make sure the power and network is keeping connected during the process. or the upgrade will fail.
- After the version upgrade is complete, you need to restore factory defaults; a, through web to restore the factory default configuration; b, through the recovery menu; c, remote control shortcut * # 6.
- Choose one of the above three ways. If chose a, the IP accounts, passwords also need to be restored to the default.

---

5) Restore Factory Setting

Click on pop-up "Restore Factory Defaults" button and choose “yes” or “no”, then the device will restart automatically and restore factory setting.

6) Reboot

Click on the pop-up "Reboot" button and choose “yes” or “no”, then the device will restart automatically

4.2.8 Logout

Point "Logout" pop-up "Confirmation" dialog; select "Yes" or "No", choose “Yes” to exit the current page and return to the user login interface.

5. Serial Communication Control

Under normal working condition, the camera could be controlled through RS232/RS485 interface (VISCA), RS232C serial parameter are as follows:

Baud rate: 115200/38400/9600/4800/2400 bits / sec; Start bit: 1; data bits: 8; Stop bit: 1; Parity: None.

After power on, the camera first go left, then back to the middle position. Self-test is finished after the zoom moved to the farthest and then back to the nearest position. If the camera saved 0 preset before, it will be back to that position after initialization. At this point, the user can control the camera by the serial commands.

5.1 VISCA protocol list

5.1.1 Camera return command

Ack/Completion Message		
	Command packet	**Note**
ACK	z0 41 FF	Returned when the command is accepted.
Completion	z0 51 FF	Returned when the command has been executed.

z = device address + 8

Error Messages	**Command packet**	**Note**
Syntax Error	z0 60 02 FF	Returned when the command format is different or when a command with illegal command parameters is accepted.
Command Buffer Full	z0 60 03 FF	Indicates that two sockets are already being used(executing two commands) and the command could not be accepted when received.
Command Canceled	z0 6y 04 FF (y: Socket No.)	Returned when a command which is being executed in a socket specified by the cancel command is canceled. The

		completion message for the command is not returned.
No Socket	z0 6y 05 FF (y: Socket No.)	Returned when no command is executed in a socket specifild by the cancel command, or when an invalid socket number is specified.
Command Not Executable	z0 6y 41 FF (y: Execution command Socket No. Inquiry command: 0)	Returned when a command canot be executed due to current conditions.For example, when commands controlling the focus manually are received during auto focus.

5.1.2 Camera control command

Command	Function	Command packet	Note
AddressSet	Broadcast	88 30 0p FF	p：Address setting
IF_Clear	Broadcast	88 01 00 01 FF	I/F Clear
CAM_Power	On	8x 01 04 00 02 FF	Power ON/OFF
	Off	8x 01 04 00 03 FF	
CAM_Zoom	Stop	8x 01 04 07 00 FF	
	Tele(Standard)	8x 01 04 07 02 FF	
	Wide(Standard)	8x 01 04 07 03 FF	
	Tele(Variable)	8x 01 04 07 2p FF	p = 0(low) - F(high)
	Wide(Variable)	8x 01 04 07 3p FF	
	Direct	8x 01 04 47 0p 0q 0r 0s FF	pqrs: Zoom Position
CAM _Focus	Stop	8x 01 04 08 00 FF	
	Far(Standard)	8x 01 04 08 02 FF	
	Near(Standard)	8x 01 04 08 03 FF	
	Far(Variable)	8x 01 04 08 2p FF	p = 0(low) - F(high)

Command	Function	Command packet	Note
	Near (Variable)	8x 01 04 08 3p FF	
	Direct	8x 01 04 48 0p 0q 0r 0s FF	pqrs: Focus Position
	Auto Focus	8x 01 04 38 02 FF	Focus mode
	Manual Focus	8x 01 04 38 03 FF	
	One Push	8x 01 04 38 04 FF	
	One Push Triger	8x 01 04 18 01 FF	One Push Triger
CAM _Zoom Focus	Direct	8x 01 04 47 0p 0q 0r 0s 0t 0u 0v 0w FF	pqrs: Zoom Position tuvw: Focus Position
CAM_AF Sensitivity	High	8x 01 04 58 01 FF	Focus sensitivity Setting
	Normal	8x 01 04 58 02 FF	
	Low	8x 01 04 58 03 FF	
CAM_AF Zone	Top	8x 01 04 AA 00 FF	Focus Region Setting
	Center	8x 01 04 AA 01 FF	
	Bottom	8x 01 04 AA 02 FF	
	ALL	8x 01 04 AA 03 FF	
CAM_WB	Auto	8x 01 04 35 00 FF	
	3000K	8x 01 04 35 01 FF	
	3500K	8x 01 04 35 07 FF	
	4000K	8x 01 04 35 02 FF	
	4500K	8x 01 04 35 08 FF	
	5000K	8x 01 04 35 04 FF	
	5500K	8x 01 04 35 09 FF	
	6000K	8x 01 04 35 0A FF	
	6500K	8x 01 04 35 06 FF	

Command	Function	Command packet	Note
	7000K	8x 01 04 35 0B FF	
	One Push mode	8x 01 04 35 03 FF	
	One Push Trigger	8x 01 04 10 05 FF	One Push WB Trigger(Enabled during One Push WB mode)
	Manual	8x 01 04 35 05 FF	
CAM_AWB Sensitivity	Low	8x 01 04 A9 00 FF	WB Sensitivity Setting
	Normal	8x 01 04 A9 01 FF	
	High	8x 01 04 A9 02 FF	
CAM _RGain	Reset	8x 01 04 03 00 FF	Manual Control of R Gain
	Up	8x 01 04 03 02 FF	
	Down	8x 01 04 03 03 FF	
	Direct	8x 01 04 43 00 00 0p 0q FF	pq: R Gain
CAM_ Bgain	Reset	8x 01 04 04 00 FF	Manual Control of B Gain
	Up	8x 01 04 04 02 FF	
	Down	8x 01 04 04 03 FF	
	Direct	8x 01 04 44 00 00 0p 0q FF	pq: B Gain
CAM_AE	Full Auto	8x 01 04 39 00 FF	Automatic Exposure mode
	Manual	8x 01 04 39 03 FF	Manual Control mode
	Shutter priority	8x 01 04 39 0A FF	Shutter Priority Automatic Exposure mode
	Iris priority	8x 01 04 39 0B FF	Iris Priority Automatic Exposure mode
	Bright	8x 01 04 39 0D FF	Bright mode
CAM_Shutter	Reset	8x 01 04 0A 00 FF	Shutter Setting

Command	Function	Command packet	Note
	Up	8x 01 04 0A 02 FF	
	Down	8x 01 04 0A 03 FF	
	Direct	8x 01 04 4A 00 00 0p 0q FF	pq: Shutter Position
CAM_Iris	Reset	8x 01 04 0B 00 FF	Iris Setting
	Up	8x 01 04 0B 02 FF	
	Down	8x 01 04 0B 03 FF	
	Direct	8x 01 04 4B 00 00 0p 0q FF	pq: Iris Position
CAM_Gain Limit	Reset	8x 01 04 0C 00 FF	Gain Limit Setting
	Up	8x 01 04 0C 02 FF	
	Down	8x 01 04 0C 03 FF	
	Gain Limit	8x 01 04 2C 0p FF	p: Gain Positon
CAM_Bright	Reset	8x 01 04 0D 00 FF	Bright Setting
	Up	8x 01 04 0D 02 FF	
	Down	8x 01 04 0D 03 FF	
	Direct	8x 01 04 4D 00 00 0p 0q FF	pq: Bright Positon
CAM_ExpComp	On	8x 01 04 3E 02 FF	Exposure Compensation ON/OFF
	Off	8x 01 04 3E 03 FF	
	Reset	8x 01 04 0E 00 FF	Exposure Compensation Amount Setting
	Up	8x 01 04 0E 02 FF	
	Down	8x 01 04 0E 03 FF	
	Direct	8x 01 04 4E 00 00 0p 0q FF	pq: ExpComp Position
CAM_Back Light	On	8x 01 04 33 02 FF	Back Light Compensation
	Off	8x 01 04 33 03 FF	

Command	Function	Command packet	Note
CAM_WDRStrength	Reset	8x 01 04 21 00 FF	WDR Level Setting
	Up	8x 01 04 21 02 FF	
	Down	8x 01 04 21 03 FF	
	Direct	8x 01 04 51 00 00 00 0p FF	p: WDR Level Positon
CAM_NR	2D	8x 01 04 53 0p FF	P=0-7 0:OFF
	3D	8x 01 04 54 0p FF	P=0-8 0:OFF
CAM_Gamma		8x 01 04 5B 0p FF	p = 0 – 4 0：Default 1：0.45 2：0.50 3：0.55 4：0.63
CAM_Low-Light Mode	ON	8x 01 04 2D 01 FF	Low-Light Mode Setting
	OFF	8x 01 04 2D 00 FF	
CAM_Gain		8x 01 04 4C 00 00 0p 0q FF	pq：0-20
CAM PresetSpeed		8x 01 01 0p FF	p：1-10
CAM_Flicker	OFF	8x 01 04 23 00 FF	OFF
	50HZ	8x 01 04 23 01 FF	50HZ
	60HZ	8x 01 04 23 02 FF	60HZ
CAM_Aperture	Reset	8x 01 04 02 00 FF	Aperture Control
	Up	8x 01 04 02 02 FF	
	Down	8x 01 04 02 03 FF	
	Direct	8x 01 04 42 00 00 0p 0q FF	pq: Aperture Gain
CAM_Picture effect	B&W-Mode	8x 01 04 63 04 FF	Picture effect Setting
	OFF	8x 01 04 63 00 FF	

Command	Function	Command packet	Note
CAM_Memory	Reset	8x 01 04 3F 00 pq FF	pq: Memory Number(=0 to 254) Corresponds to 0 to 9 on the Remote Commander
	Set	8x 01 04 3F 01 pq FF	
	Recall	8x 01 04 3F 02 pq FF	
CAM_LR_Reverse	On	8x 01 04 61 02 FF	Image Flip Horizontal ON/OFF
	Off	8x 01 04 61 03 FF	
CAM_PictureFlip	On	8x 01 04 66 02 FF	Image Flip Vertical ON/OFF
	Off	8x 01 04 66 03 FF	
CAM_ColorSaturation	Direct	8x 01 04 49 00 00 00 0p FF	P：0~E
CAM_IDWrite		8x 01 04 22 0p 0q 0r 0s FF	pqrs: Camera ID (=0000 to FFFF)
SYS_Menu	ON	8x 01 04 06 06 02 FF	Turn on the menu screen
	OFF	8x 01 04 06 06 03 FF	Turn off the menu screen
IR_Receive	ON	8x 01 06 08 02 FF	IR(remote commander)receive On/Off
	OFF	8x 01 06 08 03 FF	
CAM_Setting Reset	Reset	8x 01 04 A0 10 FF	Reset Factory Setting
CAM_Brightness	Direct	8x 01 04 A1 00 00 0p 0q FF	pq: Brightness Position
CAM_Contrast	Direct	8x 01 04 A2 00 00 0p 0q FF	pq: Contrast Position
CAM_Flip	OFF	8x 01 04 A4 00 FF	Single Command For Video Flip
	Flip-H	8x 01 04 A4 01 FF	
	Flip-V	8x 01 04 A4 02 FF	

Command	Function	Command packet	Note
	Flip-HV	8x 01 04 A4 03 FF	
CAM_Video System	Set camera video system	8x 01 06 35 00 0p FF	P: 0~E Video format
Pan_tiltDrive	Up	8x 01 06 01 VV WW 03 01 FF	VV: Pan speed 0x01 (low speed) to 0x18 (high speed) WW: Tilt speed 0x01 (low speed) to 0x14 (high speed) YYYY: Pan Position ZZZZ: Tilt Position
	Down	8x 01 06 01 VV WW 03 02 FF	
	Left	8x 01 06 01 VV WW 01 03 FF	
	Right	8x 01 06 01 VV WW 02 03 FF	
	Upleft	8x 01 06 01 VV WW 01 01 FF	
	Upright	8x 01 06 01 VV WW 02 01 FF	
	DownLeft	8x 01 06 01 VV WW 01 02 FF	
	DownRight	8x 01 06 01 VV WW 02 02 FF	
	Stop	8x 01 06 01 VV WW 03 03 FF	
	Absolute Position	8x 01 06 02 VV WW 0Y 0Y 0Y 0Y 0Z 0Z 0Z 0Z FF	
	Relative Position	8x 01 06 03 VV WW 0Y 0Y 0Y 0Y 0Z 0Z 0Z 0Z FF	
	Home	8x 01 06 04 FF	

Command	Function	Command packet	Note
	Reset	8x 01 06 05 FF	
Pan-tiltLimitSet	Set	8x 01 06 07 00 0W 0Y 0Y 0Y 0Y 0Z 0Z 0Z 0Z FF	W:1 UpRight 0:DownLeft YYYY: Pan Limit Position(TBD) ZZZZ: Tilt Limit Position(TBD)
	Clear	8x 01 06 07 01 0W 07 0F 0F 0F 07 0F 0F 0F FF	

5.1.3 Inquiry Command

Command	Function	Command packet	Note
CAM_PowerInq	8x 09 04 00 FF	y0 50 02 FF	On
		y0 50 03 FF	Off(Standby)
CAM_ZoomPosInq	8x 09 04 47 FF	y0 50 0p 0q 0r 0s FF	pqrs: Zoom Position
CAM_FocusAFModeInq	8x 09 04 38 FF	y0 50 02 FF	Auto Focus
		y0 50 03 FF	Manual Focus
		y0 50 04 FF	One Push mode
CAM_FocusPosInq	8x 09 04 48 FF	y0 50 0p 0q 0r 0s FF	pqrs: Focus Position
CAM_AFSensitivityInq	8x 09 04 58 FF	y0 50 01 FF	High
		y0 50 02 FF	Normal
		y0 50 03 FF	Low
CAM_AFZoneInq	8x 09 04 AA FF	y0 50 00 FF	Top
		y0 50 01 FF	Center
		y0 50 02 FF	Bottom
		y0 50 03 FF	All
CAM_WBModeInq	8x 09 04 35 FF	y0 50 pq FF	pq：WB Mode

Command	Function	Command packet	Note
CAM_AWBSensitivityInq	8x 09 04 A9 FF	y0 50 00 FF	Low
		y0 50 01 FF	Normal
		y0 50 02 FF	High
CAM_RGainInq	8x 09 04 43 FF	y0 50 0B FF	
CAM_BGainInq	8x 09 04 44 FF	y0 50 00 00 0p 0q FF	pq: B Gain
CAM_AEModeInq	8x 09 04 39 FF	y0 50 00 FF	Full Auto
		y0 50 03 FF	Manual
		y0 50 0A FF	Shutter priority
		y0 50 0B FF	Iris priority
		y0 50 0D FF	Bright
CAM_ShutterPosInq	8x 09 04 4A FF	y0 50 00 00 0p 0q FF	pq: Shutter Position
CAM_IrisPosInq	8x 09 04 4B FF	y0 50 00 00 0p 0q FF	pq: Iris Position
CAM_Gain LimitInq	8x 09 04 2C FF	y0 50 0p FF	p: Gain Positon
CAM_ BrightPosiInq	8x 09 04 4D FF	y0 50 00 00 0p 0q FF	pq: Bright Position
CAM_ExpCompModeInq	8x 09 04 3E FF	y0 50 02 FF	On
		y0 50 03 FF	Off
CAM_ExpCompPosInq	8x 09 04 4E FF	y0 50 00 00 0p 0q FF	pq: ExpComp Position
CAM_BacklightModeInq	8x 09 04 33 FF	y0 50 02 FF	On
		y0 50 03 FF	Off
CAM_WDRStrengthInq	8x 09 04 51 FF	y0 50 00 00 00 0p FF	p: WDR Strength
CAM_NRLevel(2D	8x 09 04 53 FF	y0 50 0p FF	P: 2DNRLevel

Command	Function	Command packet	Note
) Inq			
CAM_NRLevel(3D) Inq	8x 09 04 54 FF	y0 50 0p FF	P:3D NRLevel
CAM_FlickerModeI nq	8x 09 04 55 FF	y0 50 0p FF	p: Flicker Settings(0: OFF, 1: 50Hz, 2:60Hz)
CAM_ApertureInq	8x 09 04 42 FF	y0 50 00 00 0p 0q FF	pq: Aperture Gain
CAM_PictureEffect ModeInq	8x 09 04 63 FF	y0 50 00 FF	Off
		y0 50 04 FF	B&W
CAM_MemoryInq	8x 09 04 3F FF	y0 50 0p FF	p: Memory number last operated.
SYS_MenuModeIn q	8x 09 06 06 FF	y0 50 02 FF	On
		y0 50 03 FF	Off
CAM_LR_Reverse Inq	8x 09 04 61 FF	y0 50 02 FF	On
		y0 50 03 FF	Off
CAM_PictureFlipIn q	8x 09 04 66 FF	y0 50 02 FF	On
		y0 50 03 FF	Off
CAM_ColorSaturat ionInq	8x 09 04 49 FF	y0 50 00 00 00 0p FF	p: Color Gain setting 0h (60%) to Eh (130%)
CAM_IDInq	8x 09 04 22 FF	y0 50 0p FF	Camera ID
IR_ReceiveInq	8x 09 06 08 FF	y0 50 02 FF	On
		y0 50 03 FF	Off
CAM_BrightnessIn q	8x 09 04 A1 FF	y0 50 00 00 0p 0q FF	pq: Brightness Position
CAM_ContrastInq	8x 09 04 A2 FF	y0 50 00 00 0p 0q FF	pq: Contrast Position
CAM_FlipInq	8x 09 04 A4 FF	y0 50 00 FF	Off
		y0 50 01 FF	Flip-H

Command	Function	Command packet	Note
		y0 50 02 FF	Flip-V
		y0 50 03 FF	Flip-HV
CAM_GammaInq	8x 09 04 5B FF	y0 50 0p FF	p: Gamma setting
CAM_VersionInq	8x 09 00 02 FF	y0 50 ab cd mn pq rs tu vw FF	ab cd : vender ID (0220) mn pq : model ID rs tu : ARM Version vw : reserve
VideoSystemInq	8x 09 06 23 FF	y0 50 0p FF	P: 0~E Video format
Pan-tiltMaxSpeedInq	8x 09 06 11 FF	y0 50 ww zz FF	ww: Pan Max Speed zz: Tilt Max Speed
Pan-tiltPosInq	8x 09 06 12 FF	y0 50 0w 0w 0w 0w 0z 0z 0z 0z FF	wwww: Pan Position zzzz: Tilt Position

Note：【x】in this chart means the device address to be operated, 【y】=【x + 8】

5.2 Pelco-D Protocol Command List

Function	Byte1	Byte2	Byte3	Byte4	Byte5	Byte6	Byte7
Up	0xFF	Address	0x00	0x08	Pan Speed	Tilt Speed	SUM
Down	0xFF	Address	0x00	0x10	Pan Speed	Tilt Speed	SUM
Left	0xFF	Address	0x00	0x04	Pan Speed	Tilt Speed	SUM
Right	0xFF	Address	0x00	0x02	Pan Speed	Tilt Speed	SUM
Upleft	0xFF	Address	0x00	0x0C	Pan Speed	Tilt Speed	SUM
Upright	0xFF	Address	0x00	0x0A	Pan Speed	Tilt Speed	SUM

DownLeft	0xFF	Address	0x00	0x14	Pan Speed	Tilt Speed	SUM
DownRight	0xFF	Address	0x00	0x12	Pan Speed	Tilt Speed	SUM
Zoom In	0xFF	Address	0x00	0x20	0x00	0x00	SUM
Zoom Out	0xFF	Address	0x00	0x40	0x00	0x00	SUM
Focus Far	0xFF	Address	0x00	0x80	0x00	0x00	SUM
Focus Near	0xFF	Address	0x01	0x00	0x00	0x00	SUM
Stop	0xFF	Address	0x00	0x00	0x00	0x00	SUM
Set Preset	0xFF	Address	0x00	0x03	0x00	Preset ID	SUM
Clear Preset	0xFF	Address	0x00	0x05	0x00	Preset ID	SUM
Call Preset	0xFF	Address	0x00	0x07	0x00	Preset ID	SUM
Query Pan Position	0xFF	Address	0x00	0x51	0x00	0x00	SUM
Query Pan Position Response	0xFF	Address	0x00	0x59	Value High Byte	Value Low Byte	SUM
Query Tilt Position	0xFF	Address	0x00	0x53	0x00	0x00	SUM
Query Tilt Position Response	0xFF	Address	0x00	0x5B	Value High Byte	Value Low Byte	SUM
Query Zoom Position	0xFF	Address	0x00	0x55	0x00	0x00	SUM
Query Zoom Position Response	0xFF	Address	0x00	0x5D	Value High Byte	Value Low Byte	SUM

5.3 Pelco-P Protocol Command List

Function	Byte1	Byte2	Byte 3	Byte 4	Byte5	Byte6	Byte7	Byte 8
Up	0xA0	Address	0x00	0x08	Pan Speed	Tilt Speed	0xAF	XOR
Down	0xA0	Address	0x00	0x10	Pan Speed	Tilt Speed	0xAF	XOR
Left	0xA0	Address	0x00	0x04	Pan Speed	Tilt Speed	0xAF	XOR
Right	0xA0	Address	0x00	0x02	Pan Speed	Tilt Speed	0xAF	XOR
Upleft	0xA0	Address	0x00	0x0C	Pan Speed	Tilt Speed	0xAF	XOR
Upright	0xA0	Address	0x00	0x0A	Pan Speed	Tilt Speed	0xAF	XOR
DownLeft	0xA0	Address	0x00	0x14	Pan Speed	Tilt Speed	0xAF	XOR
DownRight	0xA0	Address	0x00	0x12	Pan Speed	Tilt Speed	0xAF	XOR
Zoom In	0xA0	Address	0x00	0x20	0x00	0x00	0xAF	XOR
Zoom Out	0xA0	Address	0x00	0x40	0x00	0x00	0xAF	XOR
Stop	0xA0	Address	0x00	0x00	0x00	0x00	0xAF	XOR
Focus Far	0xA0	Address	0x01	0x00	0x00	0x00	0xAF	XOR
Focus Near	0xA0	Address	0x02	0x00	0x00	0x00	0xAF	XOR
Set Preset	0xA0	Address	0x00	0x03	0x00	Preset ID	0xAF	XOR
Clear Preset	0xA0	Address	0x00	0x05	0x00	Preset ID	0xAF	XOR
Call Preset	0xA0	Address	0x00	0x07	0x00	Preset ID	0xAF	XOR

Query Pan Position	0xA0	Address	0x00	0x51	0x00	0x00	0xAF	XOR
Query Pan Position Response	0xA0	Address	0x00	0x59	Value High Byte	Value Low Byte	0xAF	XOR
Query Tilt Position	0xA0	Address	0x00	0x53	0x00	0x00	0xAF	XOR
Query Tilt Position Response	0xA0	Address	0x00	0x5B	Value High Byte	Value Low Byte	0xAF	XOR
Query Zoom Position	0xA0	Address	0x00	0x55	0x00	0x00	0xAF	XOR
Query Zoom Position Response	0xA0	Address	0x00	0x5D	Value High Byte	Value Low Byte	0xAF	XOR

6. Maintenance and Troubleshooting

6.1 Camera Maintenance

- If the camera will not be used for a long time, please turn off the power switch.
- Use a soft cloth or lotion-free tissue to clean the camera body.
- Use a soft dry lint-free cloth to clean the lens. If the camera is very dirty, clean it with a diluted neutral detergent. Do not use any type of solvent or harsh detergent, which may damage the surface.

6.2 Unqualified Applications

- Do not shoot extremely bright objects for a long period of time, such as sunlight, ultra-bright light sources, etc...
- Do not operate in unstable lighting conditions, otherwise the image may flicker.
- Do not operate close to powerful electromagnetic radiation, such as TV or radio transmitters, etc…

6.3 Troubleshooting

- No image

1. Check whether the power cord is connected, voltage is OK, POWER lamp is lit.

2. Check whether the camera can “self-test” after startup (camera will do a brief pan-tilt tour and return to the home position, or if preset 0 is set, the camera will return to the preset 0 position).

3. Check that the HDMI cable is connected correctly.

1. If HDMI, make sure that the destination device is accessing the HDMI port that you plugged into.

2. If SDI, make sure that the destination device is accessing the SDI port that you plugged into.

- Abnormal display of image

1. Check setting of rotary dial on rear of camera. Be sure to use a resolution and refresh rate that is supported by

your software.

- Image is shaky or vibrating.

1. Check whether camera is mounted solidly or sitting on a steady horizontal and level surface.

2. Check the building and any supporting furniture for vibration. Ceiling mounts are often affected by building

vibration more than wall mounts.

3. Any external vibration that is affecting the camera will be more apparent when in tele zoom (zoomed in) setting.