Universal Camera

4K UHD PTZ Camera

User Manual

（**V1.0**）

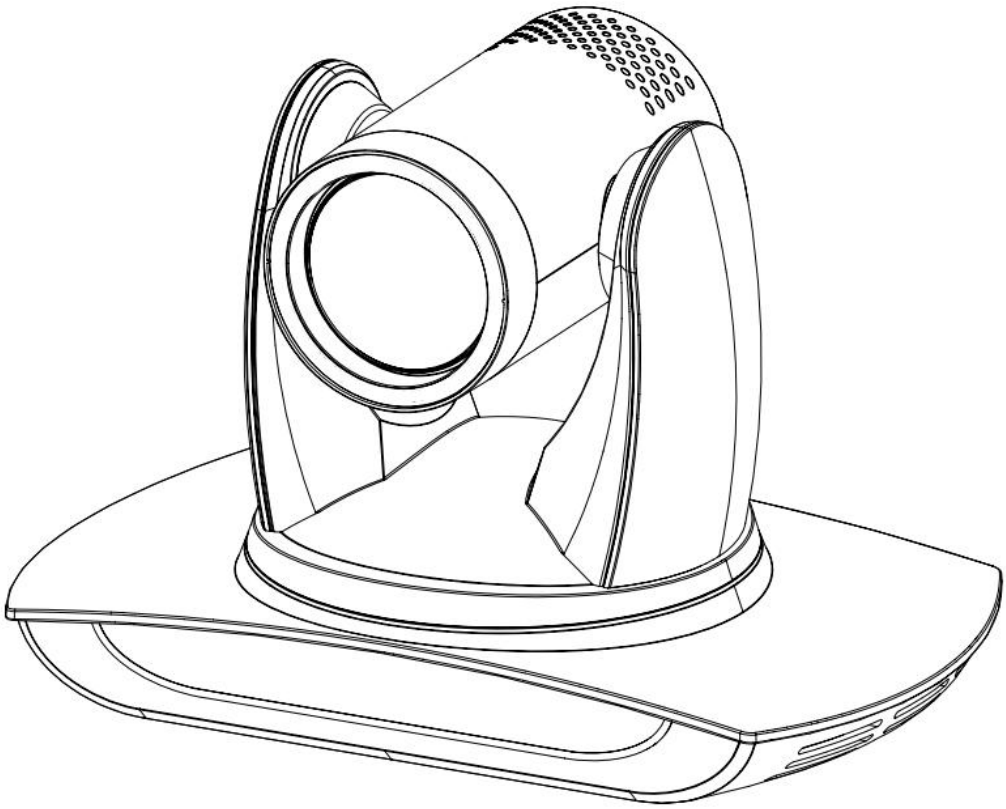

Preface

This manual is to ensure that the user can use the product properly and avoid danger while operating. Before using this product, please read the user manual carefully and keep it properly for future reference

Overview

This manual is about PTZ camera operation

Graphic Symbols

Description of graphic symbols used in this manual

Symbols	Description
illustration	This symbol indicates that the words are clarification or supplement to this article.
Caution	This symbol indicates that negligence of the instructions may lead to mishandling that may cause injury or property damage.
Danger	This symbol indicates a risk that may result in damage to this machine or documents. Follow the instructions to avoid property damage.

Attention

This manual introduces functions, installations and operations for this product in details. Please read this manual carefully before installation and use.

Precautions

This product can only be used in the specified conditions in order to avoid any damage to the camera:

1） Do not expose the product to rain or moisture.

2） To prevent the risk of electric shock, do not open the case. Installation and maintenance should only be carried out by qualified technicians.

3） Do not use the product beyond the specified temperature, humidity or power supply specifications.

4） Please use a soft dry cloth to clean the camera. If the camera is very dirty, clean it with diluted neutral detergent; do not use any type of solvents, which may damage the surface.

Electrical Safety

Installation and use of this product must strictly comply with local electrical safety standards.

Transportation

Avoid any stress, vibration, or moisture during transportation, storage, installation and operation

Installation

1） Do not rotate the camera head violently, otherwise it may cause mechanical failure;

2） This product should be placed on a stable desktop or other horizontal surface. Do not install the product obliquely, otherwise it may display inclined image;

3） Ensure there are no obstacles within rotation range of the holder.

4） Do not power on before completely installation.

Do Not Dismantle Camera

We are not responsible for any unauthorized modification or dismantling.

Magnetic Interference

Electromagnetic fields at specific frequencies may affect the video image. This product is Class A. It may cause radio interference in household application. Appropriate measure is required.

Content

1. Quick Start 1
1.1 Interface 1
1.2 Power-on Self-Test 1
1.2.1 Power on 1
1.2.2 Self-test 1
1.3 Video Output 2
1.3.1 Network Output 2
1.3.2 HDMI Output 2
1.3.3 USB3.0 Output 2
1.4 Bracket 2
1.4.1 Steps of Wall Mount 3
1.4.2 Steps of ceiling mount 4
2. Product Overview 5
2.1 Product Introduction 5
2.1.1 Dimension 5
2.1.2 Accessory 5
2.2 Product Features 6
2.3 Technical Specification 6
2.4 Interface 10
2.4.1 Interface Introduction 10
3. How to Use 11
3.1 Output Image 11
3.1.1 Power-on Self-test 11
3.1.2 Video Output 11
3.2 Remote Control 11
3.2.1 IR Remote Control 12
3.2.2 Remote Control Usage 13
3.3 Menu Setting 15
3.3.1 Main Menu 15
3.3.2 Monocular Tracking 16
3.3.3 System Setting 17
3.3.4 Camera Parameter Setting 17
3.3.5 P/T/Z 21
3.3.6 Video Format 21
3.3.7 Network Setting 22
3.3.8 Version 22
3.3.9 Restore Default 23

4. Network Connection 24
4.1 Connection Method 24
4.2 Camera Web Interface 25
4.2.1 Web Login 25
4.2.2 Preview 25
4.2.3 Monocular AI Tracking Function Web Page Configuration 26
4.2.4 Configuration 27
4.2.5 Audio Configuration 28
4.2.6 Video Configuration 28
4.2.7 Network Configuration 32
4.2.8 System Configuration 34
4.2.9 Logout 35
5. Serial Port Communication Port 36
5.1 VISCA Protocol List 36
5.1.1 VISCA Protocol List 36
5.1.2 Camera Control Command 37
5.1.3 Inquiry Command 42
5.2 Pelco-D Protocol Command List 45
5.3 Pelco-P Protocol Command List 46
6. Maintenance and Troubleshooting 48
6.1 Camera Maintenance 48
6.2 Troubleshooting 48

1. Quick Start

1.1 Interface

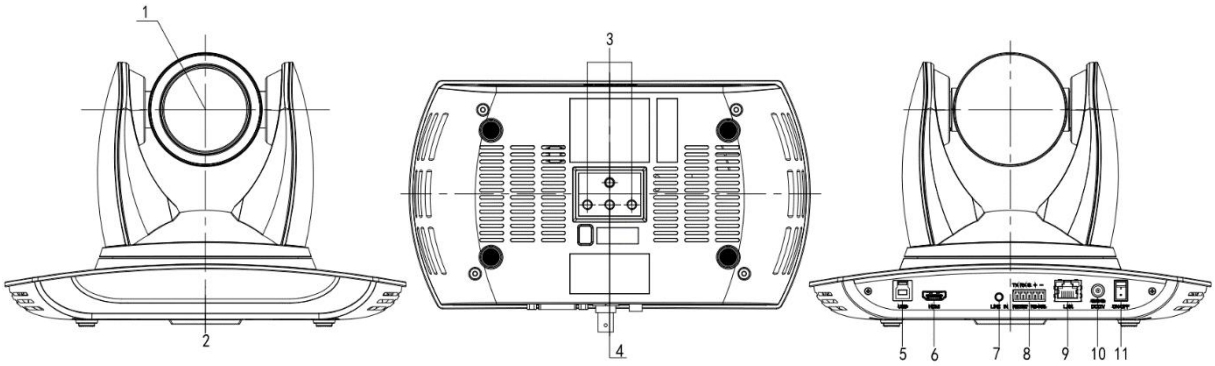

Figure1-1 Interface

Interface Introduction:

1, Lens	5, USB3.0	9, Network
2, Receiving Light	6, HDMI	10, DC12V Power In Socket
3, Hole for Installation Fixation	7, Audio In	11, Power Switch
4, Screw Hole for Tripod	8, RS232&RS485 (In)	

When using the camera, please put the plastic pad on the center bottom of device

1.2 Power-on Self-Test

1.2.1 Power on

Connect device to power socket with DC12V power adapter

1.2.2 Self-test

After power on, the receiver light will start flashing and camera will do a brief pan-tilt tour and return to the home position. When light stop flashing, the self-test is finished.

Caution:

- Default address of the remote control is 1#. When menu restore default setting, the address of IP remote control will restore 1#.
- If preset 0 is set, the camera will return to the preset 0 position after self-test

1.3 Video Output

This series camera can output video through network, HIMI and USB3.0.

1.3.1 Network Output

a, Network connection: Shown as diagram 1.1 #9

b, Log in: You can reach the Web Interface by typing in the camera's IP address(default 192.168.5.163) into a web browser. To log in, type in "admin" into the username and password fields. From the Web Interface, you can adjust many of your camera's settings via this IP interface, like PTZ control, and configuration setting.

1.3.2 HDMI Output

a, HDMI connection: Shown as diagram 1.1 #6

b, Connect camera to the display device via HDMI cable.

1.3.3 USB3.0 Output

a, USB3.0 connection: Shown as diagram 1.1 #5.

b, Open video software and select image device to output video.

1.4 Bracket

Caution:

- Default Bracket installation is limited to ceiling mounting and vertical wall mounting on surfaces such as formwork or concrete; it cannot be installed on gypsum board.

1.4.1 Steps of Wall Mount

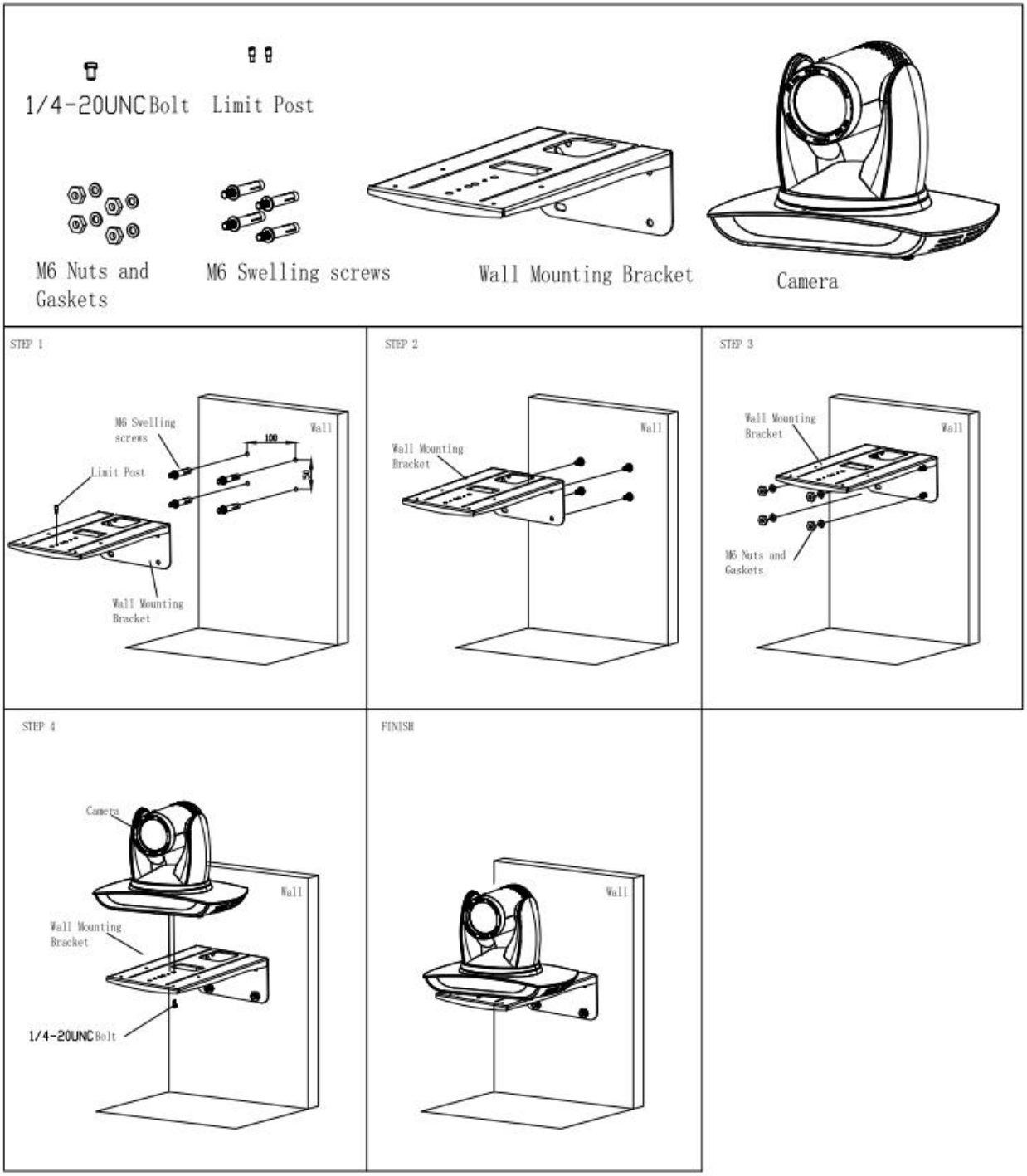

Figure 1-2 Steps of Wall Mount

1.4.2 Steps of ceiling mount

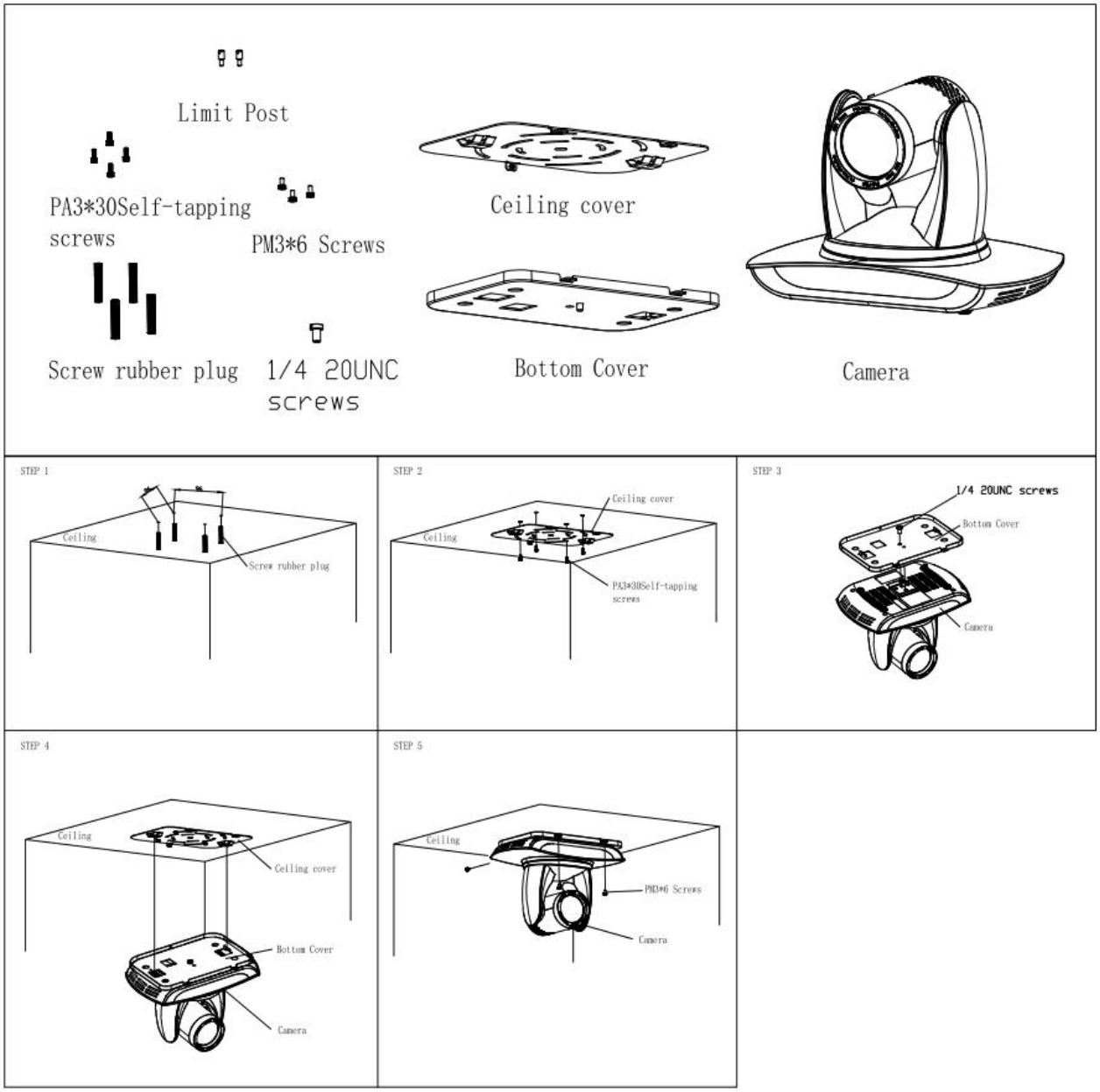

Figure 1-3 Step of ceiling mount

2. Product Overview

2.1 Product Introduction

2.1.1 Dimension

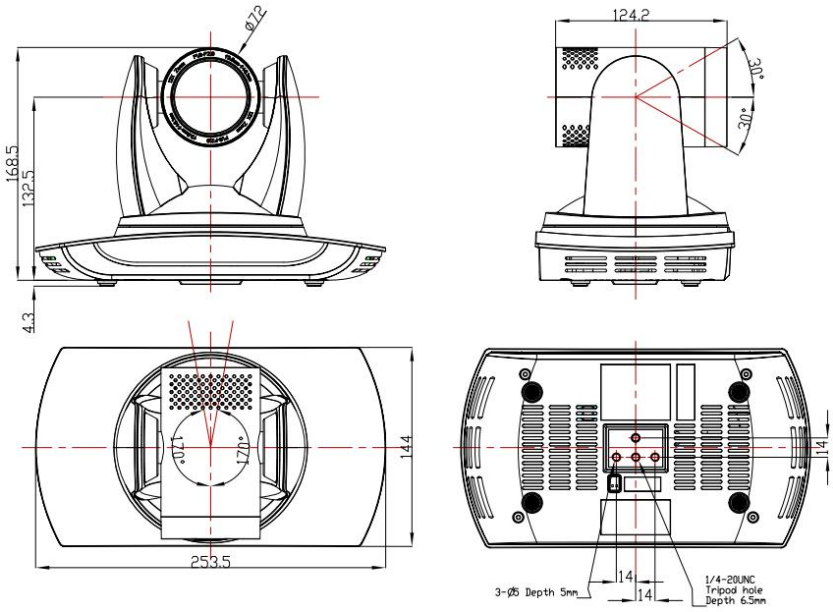

Figure 2-1 Dimension

2.1.2 Accessory

When you unpack your package, check that all the supplied accessories are included:

Table 2-1 Accessory

Item	Configuration	Accessory
Accessory	Standard	Power Adapter
		IR Remote Control
		Plastic Pad
		USB3.0 Cable
		RS232 Phoenix Terminal
		Brackets for Wall Mounting
		Quick Start Guide
	Optional	Brackets for Ceiling Mount

2.2 Product Features

This series camera offers perfect functions, superior performance and rich interfaces. The features include advanced ISP processing algorithms to provide vivid images with a strong sense of depth, high resolution and fantastic color rendition. It supports H.265/H.264 encoding which makes motion video fluent and clear even with less than ideal bandwidth conditions.

- **UHD Image:** It employs 1/2.8 inch 8.42 M high quality CMOS sensor. Resolution is up to 3840x2160 with frame rate up to 30 fps.
- **Leading Auto Focus Technology:** Leading autofocus algorithm allow the camera to focus swiftly, accurately, and stably.
- **Low Noise High SNR:** Low noise CMOS effectively ensure the camera's ultra-high SNR. 2D&3D noise reduction technology further reduce the noise without image comprising.
- **Multi Video Outputs:** Support HDMI, USB3.0 and wired LAN (POE+);
- **Multi Audio Video Compression Standards:** Support H.265/H.264 video compression, support AAC audio compression; support up to 1920x1080 resolution 60 frames/second compression;
- **Audio Input:** Support AAC and 48000 sampling frequency.
- **Multiple Network Protocols:** Support ONVIF, GB/T28181, RTSP, RTMP and NDI protocols, and also support RTMP push mode, easily link to streaming media servers (Wowza, FMS); support RTP multicast mode; support network full command VISCA control protocol
- **Multiple Control Protocols:** Support VISCA, PELCO-D, PELCO-P protocol, and support automatic identification protocol.
- **Super Quiet PTZ:** High-precision stepping motors and precision motor drive controllers ensure that the pan/tilt runs smoothly at low speeds.
- **Low-power Sleep Function:** Support low-power sleep/wake up, the consumption is lower than 400mW under sleep mode
- **255 Presets Positions:** Up to 255 presets (10 presets by remoter).
- **Various Remote Controls:** Support IR remote control and wireless remote control. The 2.4G wireless remote controller is unaffected by angle, distance, or infrared interference. It supports signal pass-through functionality for convenient use with backend devices.
- **Wide Application:** Applied in remote education, teaching recording and broadcasting, conference systems, remote training, telemedicine, courtroom systems, and emergency command systems.

2.3 Technical Specification

Table 2-2 Camera Lens Parameter

Parameter/Model	20X
Camera Lens	
Image Sensor	1/2.8 inch high quality CMOS sensor
Effective Pixel	8.42 megapixel, 16:9
Video Signal	HDMI: 4KP30, 4KP25, 1080P60, 1080P50, 1080P30, 1080P25, 720P60, 720P50, 1080P59.94, 1080P29.97, 720P59.94 USB: Main Stream:YUY2/NV12: 1920×1080/1280×720/1024×576/800×600/800×448/640×360/640×480/480×270/320×180@30/25/20/15/10/5 fps; MJPG/H.264: 3840×2160/2560×1440/1920×1080/1600×896/1280×720/ 1024×576/960×540/800×600/800×448/720×576/720×480/640×360/640×480/480×270/352×288/320×240@30/25/20/15/10/5 fps; Substreams: YUY2/NV12: 1920×1080/1280×720/1024×576/800×600/800×448/640×360/640×480/480×270/320×180@25/20/15/10/5 fps; MJPG/H.264: 1920×1080/1600×896/1280×720/1024×576/960×540/800×600/800×448/720×576/720×480/640×360/640×480/480×270/352×288/320×240@30/25/20/15/10/5 fps; LAN Main Stream:H.264/H.265: 3840×2160/1920×1080/1280×720/640×480/640×360@30/25/20/15/10/5 fps Sub-stream:H.264/H.265: 1920×1080/1280×720/640×480/640×360@30/25/20/15/10/5 fps Note: USB and LAN do not support simultaneous 4K output; this can be modified under the “Video Output” section on the web interface.
Focal Length	f=5.05~101mm
Viewing Angle	D: 67.45° - 3.94° H: 60.04° - 3.45°

	V: 35.31° - 1.97°
Iris	F1.8 – F2.9
Digital Zoom	15X
Minimum Illumination	0.5Lux(F1.8, AGC ON)
DNR	2D & 3D
White Balance	Auto/Manual/One-Touch White Balance/2400K-7100K
Focus	Auto/Manual/One-push
Iris	Auto/Manual
Electronic Shutter	Auto/Manual
BLC	On/off
Dynamic Range	Off/dynamic level adjustment
Video Adjustment	Brightness, Contrast, Sharpness, Horizontal Flip, Vertical Flip (displayed when Auto Flip is off), Monochrome Mode, Gamma Curve, Electronic Zoom, DCI, Lens Distortion Correction
SNR	>55dB

Table 2-3 Interface Parameter

Interface Parameter	
Interfaces	HDMI, USB3.0, LAN(Support POE+) , A-IN, RS232-IN, RS485-IN, DC12V Power Switch.
Video Output	HDMI, LAN, USB3.0
Image Data Stream	Dual Stream Output
Video Compression Format	LAN: H.264, H.265 USB 3.0: MJPG, H264, H.265, YUY2, NV12
Audio Input Interface	Double track 3.5mm linear input;
Audio Compression Format	AAC
LAN Interface	100M Ethernet port, optional POE+ power supply, supports audio and video output
Network Protocol	RTSP/RTMP, ONVIF, GB/T28181; Support network VISCA control protocol;

	Support remote upgrade, remote restart, remote reset
Control Interface	RS232-IN, RS485
Serial Port Communication Protocols	VISCA/Pelco-D/Pelco-P; Support Baudrate: 115200/38400/9600/4800/2400
USB Communication Protocol	UVC(Video Communication Protocol)
Power Supply	HEC3800 Power Socket(DC12V)
Power Adapter	Input: AC110V~AC220V ; Output: DC12V/1.5A
Input Voltage	DC12V±10%
Input	<1.36A
Consumption	<16W

Table 2-4 PTZ Parameter

PTZ Parameter	
Pan Move	-170° ~ +170°
Tilt Move	-30° ~ +30° °
Pan Speed	0.1°/s ~ 100°/s
Tilt Speed	0.1°/s ~ 45°/s
Preset Speed	Pan: 100°/s，Tilt: 45°/s
Preset Quantity	Up to 255 preset (10 via remote control)

Table 2-5 Other Parameter

Other Parameter	
Storage Temperature	-10℃ ~ +60℃
Storage Humidity	20% ~ 95%
Working Temperature	-10℃ ~ +50℃
Working Humidity	20% ~ 80%
Dimension	253.5(L)mm×144mm(W)×169mm(H)
Weight	1.46kg
Environment	Indoors

2.4 Interface

2.4.1 Interface Introduction

Interface of this camera include: HDMI, USB3.0,

Audio In, RS232 In, RS485, DC12V Power Supply.

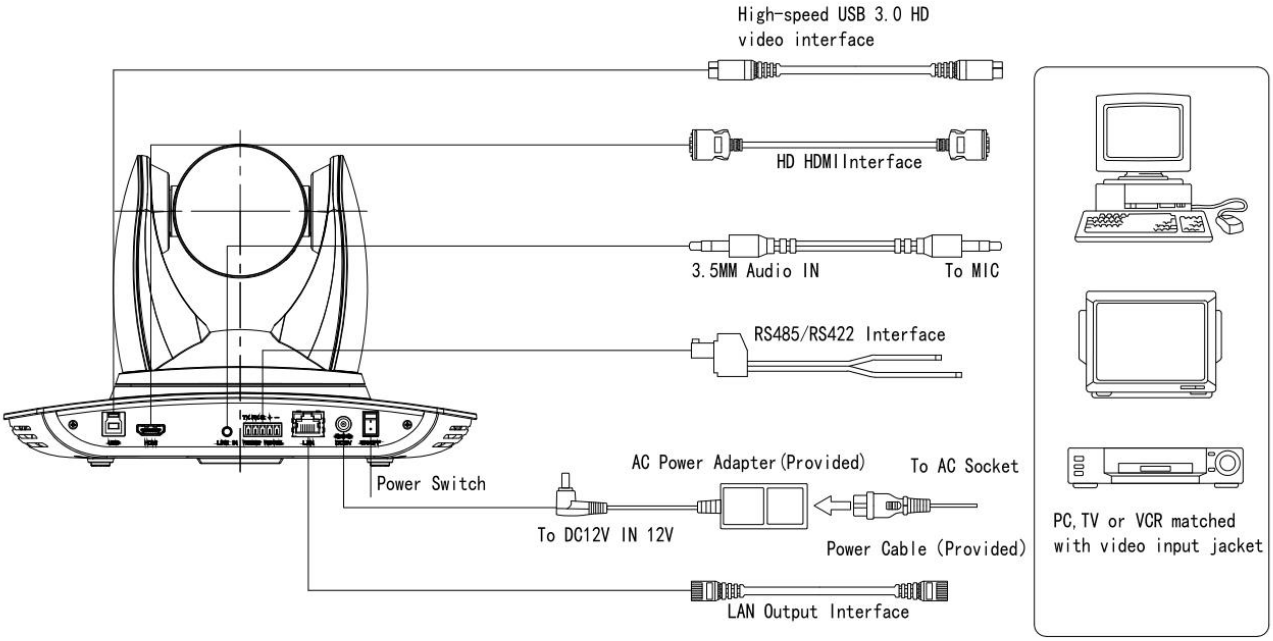

Figure 2-2 Interface Diagram

3. How to Use

3.1 Output Image

3.1.1 Power-on Self-test

Connect the DC12V power cable; the device will perform a self-test upon power-up. During self-test, the remote control reception indicator flashes. The pan-tilt unit rotates left to the far left position, then down to the far bottom position, and finally returns to the HOME position (horizontal and vertical axes both centered). Simultaneously, the lens retracts and zooms out. After self-test completion, the remote control reception indicator stops flashing. If Preset Position 0 is configured, the device automatically moves to Preset Position 0 after power-on self-test completion.

3.1.2 Video Output

Connecting the video output cable: Users may refer to Section 1.1 for details.

1) Network output: connect this product and your computer through network cable, then open the browser, enter the camera IP address (factory default 192.168.5.163) in the address bar, then to the login page and input a user name and password (factory default are “admin”) , Finally enter the preview page, and the image comes out.

(Note: If you forget your username, password, or IP address, press the remote control combination keys [*] [#] [Manual]; this will reset the IP address, username, and password to their default values.)

2) HDMI Output: Connect the monitor with the corresponding video output interface.

3) USB 3.0 compatible with USB 3.0 output/USB 2.0 output: Connect this product to a computer's USB 2.0 port. Open Device Manager to verify whether the image device or Universal Serial Bus controllers recognize the USB 3.0/USB 2.0 device. After successful recognition, launch image viewing software and select the image device to display the image.

3.2 Remote Control

Remote control using instruction: There are wireless remote control and IR remote control for options.

Steps for wireless remote control usage are as below:

1)Code Pairing

Press the "Settings" + "*" button for 3 seconds, the LED will turn off to flashing, after releasing the button, the LED light will keep flashing to start the code pairing, the receiver is powered on, and the LED will be off when the code pairing is successful; If you use other remote control, you need to clear the code of this remote control, or re-pair the code of the new remote control. If the code pairing has been unsuccessful, the red LED light flashes for 20 seconds and then goes out, stop the code pairing and go to sleep; at this time, press any key to wake up and re-pair the code.

Note: After the code is successfully matched, select the camera address to control it

2)Clear Code Data

Press the "Settings" key + "#" key from light off to flashing, the receiving end is powered off and then powered on. The LED is off, indicating that the paired data is cleared successfully

3)Enter Sleep Mode and Wake Up

If there is no operation in the working state, it will immediately enter the sleep mode, and press any key to wake up.

Note: The buttons and usage methods of the infrared remote control and wireless remote control are identical.

3.2.1 IR Remote Control

1. Standby Key

After 3S long press, the camera will step into standby mode. Long press 3S again, the camera will self-test again and back to HOME position. (Note: If power-on mode is turned on and Preset 0 is set, and there is no operation within 12s, it will automatically point to the specified preset position.)

2. Camera Address Selection

Select the camera **address** to be controlled

3. Number Key

Set or run 0-9 presets

4,*, # Key

Key combination use

5. Focus Control Key

Auto Focus: Enter into auto focus mode.

Manual Focus: The camera focus mode is manual

Switch the camera focus mode to manual focus by pressing [focus +] or [focus -] to adjust.

6. Zoom Control Key

Zoom＋: Lens near

Zoom－: Lens far

7. Set or Clear Preset key:

Set Preset: Set preset key + 0-9 number key:

Clear Preset key: Clear preset key + 0-9 number key

8. Pan/Tilt Control Key

Press ▲Key : Up Press ▼Key : Down

Press ◀Key : Left Press ▶Key : Right

“HOME” Key: Return to the middle position or enter into the next level menu

9. BLC Control Key

Back Light ON/OFF: Turn on or off the back light

10. Menu Setting

Open or close the OSD menu; Enter/exit the OSD menu or return to the previous menu.

11. Camera IR Remote Control Address Setting

【*】+【＃】+【F1】: Camera Address No.1 【*】+【＃】+【F2】: Camera Address No. 2

【*】+【＃】+【F3】: Camera Address No. 3 【*】+【＃】+【F4】: Camera Address No. 4

12. Key Combination Functions

【#】+【#】+【#】:Clear all presets

【*】+【#】+【9】:Flip switch

【*】+【#】+【3】:Menu set to Chinese

【*】+【#】+【4】:Menu set to English

【*】+【#】+Auto: Enter into the aging mode

【#】+【*】+Auto: Stop aging mode

【*】+【#】+【6】:Restore factory defaults

【*】+【#】+Manual: Restore the default IP, user name, password

【#】+【#】+【9】:Switch the video format to NA

【#】+【#】+【0】:Switch the video format to 1080P60

【#】+【#】+【1】: Switch the video format to 1080P50

【#】+【#】+【2】:Switch the video format to 1080P30

【#】+【#】+【3】:Switch the video format to 1080P25

【#】+【#】+【4】:Switch the video format to 720P60

【#】+【#】+【5】:Switch the video format to 720P50

【#】+【#】+【6】:Switch the video format to 1080P59.94

【#】+【#】+【7】:Switch the video format to 1080P29.97

【#】+【#】+【8】:Switch the video format to 720P59.94

3.2.2 Remote Control Usage

Finishing initialization, it can receive and execute the IR commands. Press the remote controller button, the indicator light is flashing; release the button, the indicator light stops flashing. Users can control the pan/tilt/zoom, setting and running preset positions via the IR remote controller.

Key Instruction:

1. In this instruction, “press the key” means a click rather than a long-press, and a special note will be given if a long-press for more than one second is required.

2. When a key-combination is required, do it in sequence. For example,“ 【*】+【#】+【F1】”means press“【*】”first and then press“【#】” and last press“【F1】”

1) Camera Selection

Select the camera address to control.

2) Pan/Tilt Control

Up: press ▲ Down: press ▼

Left: press ◀ Right: press ▶

Back to middle position: press“【HOME】”

Press and hold the up/down/left/right key, the pan/tilt will keep running, from slow to fast, until it runs to the endpoint; the pan/tilt running stops as soon as the key is released.

3) Zoom Control

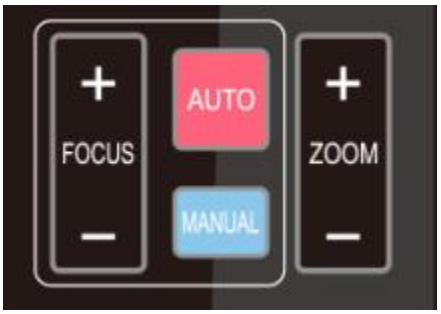

ZOOM IN: press “ZOOM +“ key

ZOOM OUT: press “ZOOM -” key

Press and hold the key, the camera will keep zooming in or zooming out. It stops as soon as the key is released.

4) Focus Control

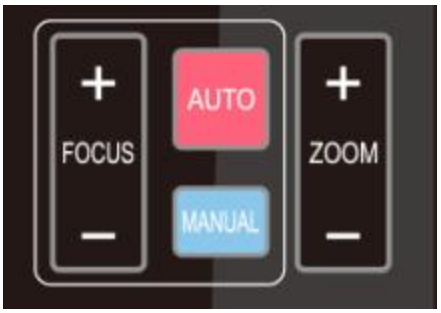

Focus (near):Press “【Focus+】” key (Valid only in manual focus mode)

Focus (far): Press “【Focus-】”key (Valid only in manual focus mode)

Press and hold the key, the action of focus will keep continue and stops as soon as the key is released.

5) Presets Setting, Running, Clearing

1. Preset setting: to set a preset position, the users should press the "【SET PRESET】" key first and then press the number key 0-9 to set a relative preset,

Note: 10 preset positions in total are available by remote controller.

2. Preset Running: Press a number key 0-9 directly to run a relative preset.

Note: Action in vain if a relative preset position is not existed.

3. Preset clearing : to clear a preset position, the user can press the "【CLEAR PRESET】" key first and then press the number key 0-9 to clear the relative preset;

Note : press the"【#】" key three times continually to cancel all the presets.

6) Camera Remote Controller Address Setting

【*】+【#】+【F1】:Camera Address No.1

【*】+【#】+【F2】:Camera Address No. 2

【*】+【#】+【F3】:Camera Address No. 3

【*】+【#】+【F4】:Camera Address No. 4

3.3 Menu Setting

3.3.1 Main Menu

In normal working mode, press 【MENU】key to display the menu, using scroll arrow to point at or highlight the selected items.

```
MENU
================
Language                English
（Monocular Tracking）
（Setup）
（Camera）
（P/T/Z）
（Video Format）
（Network Settings）
（Version）
（Restore Default）

[↑↓]Select [← →]Change Value
[Menu]Back          [Home]OK
```

Language: Chinese/English

Setting: Enter into submenu of system setting

Camera Parameter: Enter into submenu of camera parameter

Monocular Tracking: Enter into submenu of monocular tracking

Version: Enter into submenu of version

P/T/Z: Enter into submenu of PTZ parameter

Video Format: Enter into submenu of video format **Network:** Enter into submenu of Network parameter

Restore Factory Default: Select Yes or No to restore factory default.

[↑↓]Select: Press**[↑↓]** to Select menu

[← →]Revise: Press[←→] to revise parameter

[Menu]Return: Press [Menu] to return

[Home]Confirm: Press [Home] to confirm

3.3.2 Monocular Tracking

In the main menu, move the cursor to "Monocular Tracking" and press the [HOME] button to enter the settings page, as shown in the image below.

```
Monocular Tracking
= = = = = = = = = = = = = = =
Monocular Tracking          ON
Track Mode     Real-time Tracking

[↑↓]Select[← →]Change Value
```

Tracking Switch: Available options: ON/OFF

Track Mode: Real-time Tracking/Area Tracking

3.3.3 System Setting

Move the pointer to the (Setup) in the Main Menu, click the【HOME】key and enter into the (Setup) as shown below,

```
SETUP
================
Protocol                Auto
Visca Address            1
Visca Address Fix       OFF
PELCO-P Address          1
PELCO-D Address          1
Baudrate                9600
USB Transmission Mode    ON
Auto Flip                ON
Prompt                   ON

[↑↓]Select   [← →]Change Value
```

PROTOCOL: VISCA/Pelco-P/Pelco-D/Auto

Auto-Flip: On/Off

Visca ADDR: VISCA=1~7,Pelco-P=1~255, Pelco-D =1~255

Visca Address Fix: On/Off

Baud Rate: 2400/4800/9600/38400/115200

Prompt: On/Off

USB Transmission Mode: On/Off

3.3.4 Camera Parameter Setting

Move the pointer to the (CAMERA) in the Main Menu, click the【HOME】key and enter the (CAMERA) as follow

```
CAMERA
================
（Exposure）
（Color）
（Image）
（Focus）
（Noise Reduction）
 Style                  Default

[↑↓]Select   [← →]Change Value
[Menu]Back          [Home]OK
```

Exposure: Enter into Exposure setting

Color: Enter into color setting

Image: Enter into image setting

Focus: Enter into focus setting

Noise Reduction: Enter into noise reduction

Style: Default, Normal, Clarity, Bright, Soft

1)Exposure

Move the pointer to the (EXPOSURE) in the Main Menu, click the【HOME】and enter the (EXPOSURE) as follow

```
EXPOSURE
================
Mode                Auto
EV                  OFF
BLC                 OFF
Flicker             50Hz
G.Limit             6
DRC                 3

[↑↓]Select    [← →]Change Value
[Menu]Back
```

Mode: Auto, Manual, Shutter priority, Iris priority and Brightness priority.

EV: On/Off (only available in auto mode)

Compensation Level: -7~7 (only available in auto mode when EV is ON)

BLC: ON/OFF for options (only available in auto mode)

Anti-Flicker: OFF/50Hz/60Hz for options (only available in Auto/Iris **priority**/Brightness **priority** modes)

Gain Limit: 0~15(only available in Auto/ Iris **priority** /Brightness **priority** mode)

DRC: Close, 1~8

Shutter: 1/25, 1/30, 1/50, 1/60, 1/90, 1/100, 1/120, 1/180, 1/250, 1/350, 1/500, 1/1000, 1/2000, 1/3000, 1/4000, 1/6000, 1/10000 (only available in Manual and Shutter priority mode)

IRIS: OFF, F11.0, F9.6, F8.0, F6.8, F5.6, F4.8, F4.0, F3.4, F2.8, F2.4, F2.0, F1.8 (only available in Manual and Iris priority mode)

Brightness: 0~20 (only available in Brightness **priority** mode)

Gain: Set the gain value 0~15. (Only available in Manual and shutter priority mode)

2)Color

Move the pointer to the (COLOR) in the Main Menu, click the【HOME】and enter the (COLOR) as follow

```
COLOR
===============
WB Mode              Auto
RG Tuning             0
BG Tuning             1
Saturation           40
Hue                   4
AWB Sensitivity      High

[↑↓]Select   [← →]Change Value
[Menu]Back
```

WB Mode: Auto, Manual, One Push, Specified Color Temperature

Red Tuning: -10~10(only available in Manual mode)

Blue Tuning: -10~10(only available in Manual mode)

Red Gain: 0~100(only available in Manual mode)

Blue Gain: 0~100(only available in Manual mode)

Saturation: 0~127

Hue: 0~8

AWB Sensitivity: high/middle/low(only available in Auto mode)

Specified Color Temperature: 2400K-7100K(only available in Specified color temperature)

3)Image

Move the pointer to the (IMAGE) in the Menu, click the【HOME】and enter the (IMAGE) as follow

```
IMAGE
===============
Brightness           50
Contrast             50
Sharpness             3
B&W-Mode            Color
Gamma               Default
DZoom               OFF
Low-Light Mode      OFF

[↑↓]Select   [← →]Change Value
[Menu]Back
```

Brightness: 0~100

Contrast: 0~100

Sharpness: 0~15

Flip-H: On/Off

Flip-V: On/Off

Gamma: default, 0.45, 0.50, 0.55, 0.63

Low Light Mode: On/Off

B&W Mode: color, black/white

DZoom: On/Off

4)Focus

Move the pointer to the (FOCUS) in the Menu, click the【HOME】and enter the (FOCUS) as follow.

```
FOCUS
= = = = = = = = = = = = = = =
Focus Mode                Auto
Focus Tactics              All
AF-Sensitivity             Low

[↑↓]Select     [← →]Change Value
[Menu]Back
```

Focus Mode: Auto, Manual, One-push

Focus Tactics: All, Top, Center, Bottom

AF-Sensitivity: High, Middle, Low

5)Noise Reduction

Move the pointer to the (NOISE REDUCTION) in the Menu, click the【HOME】and enter the (NOISE REDUCTION) as follow

```
NOISE REDUCTION
= = = = = = = = = = = = = = =
NR-2D                      2
NR-3D                      5
Dynamic Hot Pixel        OFF

[↑↓]Select     [← →]Change Value
[Menu]Back
```

2D Noise Reduction: Auto, Off, 1~7

3D Noise Reduction: Auto, Off, 1~7

Dynamic Hot Pixel: Off, 1~5

3.3.5 P/T/Z

Move the pointer to the (P/T/Z) in the Main Menu, click the【HOME】and enter the (P/T/Z) as follow

```
P/T/Z
==================
Speed by Zoom          ON
Zoom Speed              5
Image Freezing         OFF
Acc Curve              Slow
Preset Speed           10
PTZ Speed               7
Preset Lock            OFF
Preset Zoom Speed       8
L/R Direction          Standard

[↑↓]Select    [← →]Change Value
[Menu]Back
```

Depth of Field: Only effective for remote controller, On/ Off;

When zoom in, the Pan/Tilt control speed by remoter will become slow

Zoom Speed: Set the zoom speed for remote controller,1~8

Image Freezing: On/Off

Accelerating Curve: Fast/slow

Preset Speed: 1~10

Pan/Tilt Speed: 1~10

Preset Lock: On/Off

Preset Zoom Speed: 1~8

L/R Direction: Standard, Reverse

3.3.6 Video Format

Move the pointer to the (Video Format) in the Menu, click the【HOME】and enter the (Video Format) as follow

```
VIDEO FORMAT
===============
4KP30            4KP25
1080P60          1080P50
1080P30          1080P25
720P60           70P50
1080P59.94       1080P29.97
720P59.94

[Menu]Back       [Home]OK
```

Note: Exit menu after modifying parameter to save it

3.3.7 Network Settings

Move the pointer to the (Network Setting) in the Menu, click the【HOME】and enter the (Network Setting) as follow

```
NETWORK
= = = = = = = = = = = = = = = =
DHCP                    OFF
IP Addr          192.168.5.163
Subnet Mask      255.255.255.0
Gateway            192.168.5.1
Restart?                 NO
Restart to take effect

[↑↓]Select [← →]Change Value
[Menu]Back
```

DHCP：On/Off

Restart：Yes/No

3.3.8 Version

Move the pointer to the (VERSION) in the Main Menu, click the【HOME】and enter the (VERSION) as follow

```
VERSION
================
MCU Version          1.0.0
Camera Version       1.0.0
AF Version           1.0.0

[Menu]Back
```

MCU Version: Display MCU version information

Camera Version: Display camera version information

AF Version: Display the focus version information

3.3.9 Restore Default

Move the pointer to the (VERSION) in the Main Menu, click the【HOME】and enter the (VERSION) as follow.

```
RESTORE DEFAULT
================
Save Preset?          NO
Restore Default?      NO

[↑↓]Select   [← →]Change Value
[Menu]Back           [Home]OK
```

Save Preset: Yes/No

Restore default: Yes/No; (after restoring default, the language, color, and video format won't be restored)

Note: If the address of former remoter is not 1 but another one from 2, 3, 4, the corresponding camera address will restore to 1 when all parameters or system parameters are restored. User should change the remoter address to be 1 (press No.1 according to the camera so to get normal operation)

4. Network Connection

4.1 Connection Method

Direct Connection: Direct connections via “cross-over” network cable

Connection to LAN: Connections to LAN via patch cable to LAN wall jack or LAN switch

Caution:

- Please do not put the power and network cable in places where can be easily touched to prevent video quality lowered by unstable signal transmission due to poor contact of cables.

The computer must have the network segment where the camera IP address belongs to. The device will not be accessible if without the segment. I.E. The camera default IP address is 192.168.5.163, then segment 5 must be added in the computer. Specific steps are as below:

Firstly open the window of Local Area Connection Properties on computer, select the “Internet protocol version 4(TCP/IPv4)” as shown by picture on the left. Double click or click the property “Internet” protocol version 4 (TCP/IPv4)to enter into the Internet Protocol Version 4(TCP/IPv4) Properties window, select “Advanced” to enter into the Advanced TCP/IP Setting and add IP and subnet mask in the IP browser as picture shown below. Click the “Confirm” to finish the adding of IP segment. User can add the corresponding network segment according to the revised IP address of the camera.

Caution:

- The IP address to be added cannot be same with that of other computers or devices. The existence of this IP address needs to be verified before adding.

Click the “Start” and select “Operation” to input cmd, open DOS command window and input 192.168.5.26, then press Enter key. It will show picture as below, which means network segment has been successfully added.

```
C:\Users\Administrator>ping 192.168.5.26

Pinging 192.168.5.26 with 32 bytes of data:
Reply from 192.168.5.26: bytes=32 time<1ms TTL=128
Reply from 192.168.5.26: bytes=32 time<1ms TTL=128
Reply from 192.168.5.26: bytes=32 time<1ms TTL=128
Reply from 192.168.5.26: bytes=32 time<1ms TTL=128

Ping statistics for 192.168.5.26:
    Packets: Sent = 4, Received = 4, Lost = 0 (0% loss),
Approximate round trip times in milli-seconds:
    Minimum = 0ms, Maximum = 0ms, Average = 0ms

C:\Users\Administrator>_
```

Figure4-1 Network segment successfully added

User can also to verify network connection as steps above mentioned after the finish of camera self-check. If IP is default, open DOS command window and input 192.168.5.163, then press Enter key. It will show message as below: which means network connection is normal.

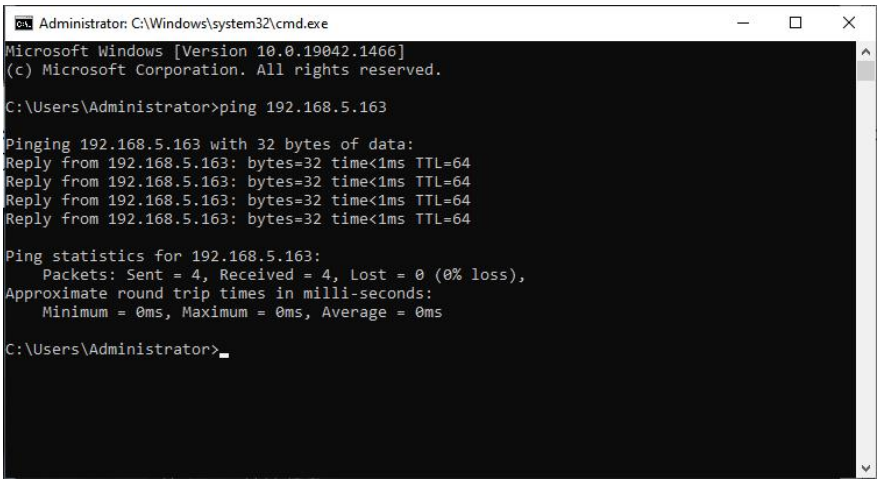

Figure4-2 Network Connection Screenshot

4.2 Camera Web Interface

4.2.1 Web Login

1)Web Login

Enter the device IP address (default: 192.168.5.163) in the browser address bar and press Enter to access the Web client login interface. Login methods are divided into administrator mode and standard user mode. Logging in via administrator mode (default username and password: admin) allows you to perform operations such as previewing, configuring, and logging out; logging in via standard user mode (default username and password: user1 or user2) only allows you to perform operations such as previewing and logging out, with no configuration options available.

Note: The Web access supports browsers such as Google Chrome (which supports previewing), Internet Explorer, 360 Browser, and other standard browsers.

Language Selection: On the right top of the interface display “中文|English”, click “English”.

4.2.2 Preview

After successful login into the management interface, it enters the video preview interface. In the preview screen, users can control PTZ, zoom, focus, sound, focus, full screen and set the preset position, run, delete and other operations.

1)Login as administrator

User name and default password: admin

You can control PTZ, zoom, focus, sound, focus, full screen and set run, and delete the preset position.

2)Login as user

User name and default password: “user1” or “user2”

You can control PTZ, zoom, focus, sound, focus, full screen and set run, and delete the preset position.

Note: Log in as a regular user without configuration privileges.

4.2.3 Monocular AI Tracking Function Web Page Configuration

1. After login, enter into the management interface and turn on Tracking below “Monocular Tracking”

2. On the right top is PTZ control area, in which you can set the preset region of Regional Tracking. Interface is as below.

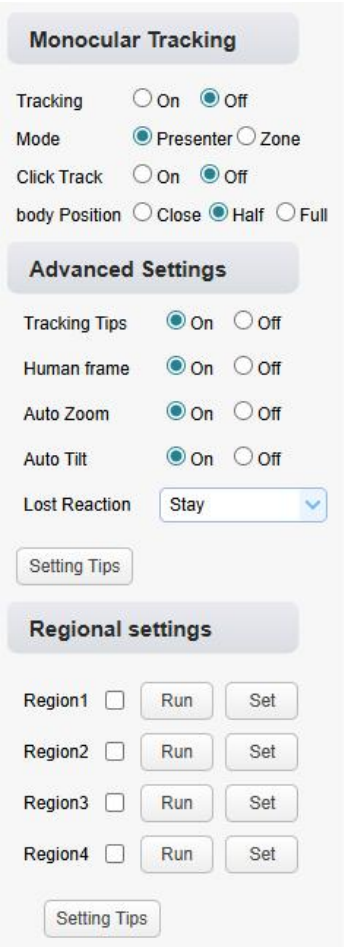

Real-time Tracking Mode: Enable for real-time tracking

Regional Tracking Mode: Select for regional tracking

Regional Settings Steps (We take Region1 as an example):

1. On the PTZ Area, adjust image by clicking direction buttons to select one region.

2. After finishing region1 setting, click “Set” to complete the Region1 Tracking. Other region settings are same as region1 setting steps.

Set 4 different regions, and minimum 2 regions. And the Regional Tracking settings can only be configured through the webpage.

Call out the regional tracking: Click “Run” of corresponding region on the “Regional settings” area.

Note: Once tracking is enabled, the PTZ becomes uncontrollable. Each view in the preset for area tracking must be continuous from left to right and overlap when setting the preset.

1.Each preset preview image must be continuous from left to right and overlap when setting the tracking regions.
2.You need to tick next to the region number to save the setting location when you setting the region.

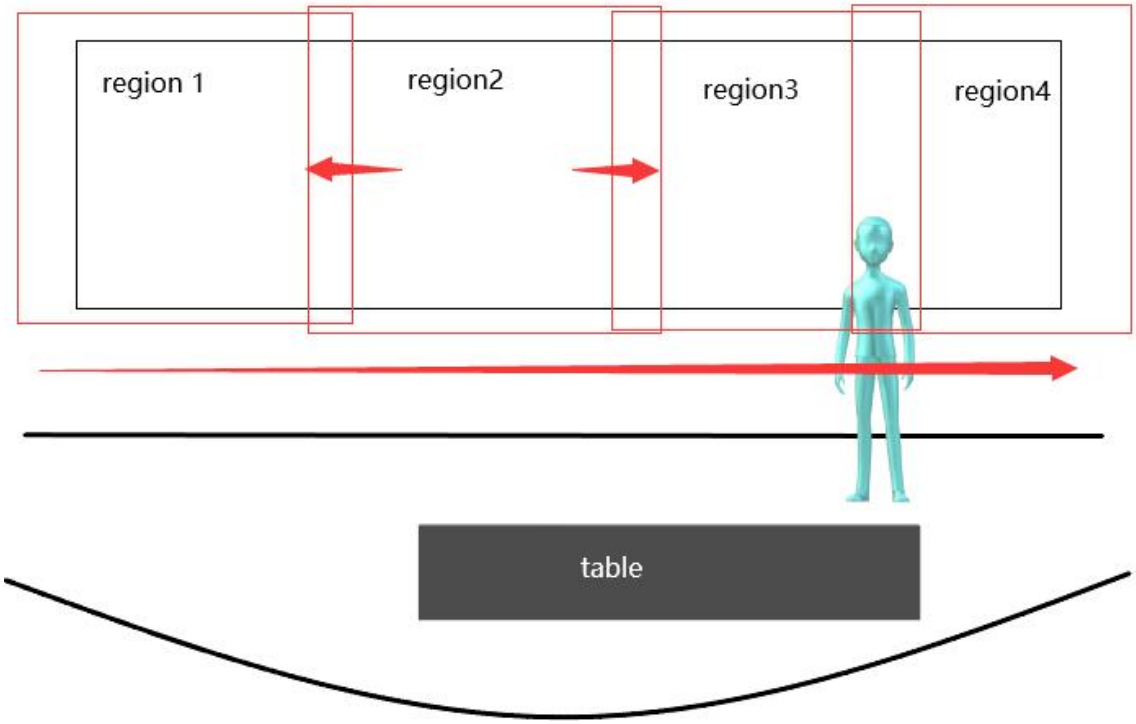

Figure 4-3 Regional Tracking Setup Diagram

4.2.4 Configuration

Click Configuration to enter into the device parameters setting page

There are the following options: audio configuration, video configuration, network configuration, internet access configuration, system configuration, detailed description see the following table.

Table 4-1 Explanation of Camera Configuration

Menu	Explanation
Audio Configuration	Including audio compressing format, sampling frequency, sampling precision, compressing code rate settings etc.
Video Configuration	Including video encoding, video parameters, character-overlapping, character size, video output setting etc.
Network Configuration	Including basic parameters, Ethernet, DNS, wireless network setting, GB28181 etc.

System Configuration	Including equipment property, system time, user management, version update, Reset, Reboot device settings etc.

4.2.5 Audio Configuration

Switch: Choose to enable the audio or not.

Compressing Format: Set audio compressing format and manually reboot the device after change (default AAC)

Sampling Frequency: Set sampling frequency and manually reboot the device after change (default 48000)

Sampling Precision: Set sampling precision (default 16bits)

Compressing Code Rate: Set audio compressing code rate (default 64, 32, 48, 96, 128 optional)

Channel Type: Set the channel type (mono by default, stereo optional)

Input volume: set the input volume (default 2, 1-10 optional)

Note Click "SAVE", it will display "Successfully saved. Restart the device to take effect".

4.2.6 Video Configuration

1)Video Encoding

Code Stream: Different video output mode setting, use different streams. (Main stream, secondary stream)

Compression Format: Set the video compression format, save to take it effect (primary/secondary stream default: H.264, H.265 optional)

Profile: Profile Mode Setting (Default HP, BP, MP Optional)

Video Size: Set video image resolution, save to take it effect (main stream default 1920*1080; default secondary stream 1280*720,640*360, 640*480 optional)

Stream Rate Control: Set rate control mode, save to take it effect (Primary/secondary stream default variable bit rate, fixed rate is for option).

Image Quality: Set the image quality, image quality can be changed only when rate control is variable bit rate,(main stream defaulted is better, secondary stream default is not good, there are best, better, good, bad, worse, worst for options).

Rate (Kb/s): Set the video bit rate (main stream default 4096Kb/s, 64-40960Kb/s optional; secondary stream default 512Kb/s, 64-40960Kb/s optional).

Frame Rate (F/S): Set video frame rate (main stream defaults to 30 FPS, sub-stream defaults to 25 FPS; main/sub-streams support 5-60 FPS).

Key frame interval: Set keyframe interval (main stream default 90, sub stream default 75, main/sub stream selectable from 1-150)

Minimum QP of Key Frame Interval: Set minimum QP of key frame interval(Default 20, 10-51 optional)

Stream Name: When streaming via rtsp or rtmp, user can modify stream name. Main Stream(live/av0), sub stream(live/av1)

Click the "Save" button to display the "Parameter saved successfully" message, then settings take effect.

2)Stream Release

Switch: To turn on/off the main/secondary stream.

Protocol: Primary/secondary stream applies RTMP, RTSP and SRT protocol.

Host Port: Server port number (default 1935, 0-65535 optional)

Host Address: Server IP addresses (default 192.168.5.11)

Stream Name: Choose a different stream name (live/av0, live/av1 optional).

User: Set the user name.

Password: Set the password.

Click on the "Save" button to display the "Save successful" message, then settings take effect.

3) RTP Multicast/Unicast

Main/Sub Stream: On/off;

Protocol: RTP or TS

Address: Default 224.1.2.3. It can be edited.

Port: The main stream defaults to 4000, the secondary stream defaults to 4002, and the main/secondary stream is optional from 0 to 65535.

Visit: Address comes up after setting. Eg; rtp://224.1.2.3:4000; udp://@224.1.2.3:4000; tcp://@224.1.2.3:4002;

4) Video Parameters

A)Focus: Focus mode, focus tactic, focus sensitivity can be set.

Focus Mode: Set the focus mode (Default automatic, manual optional, one-push)

Focus Tactic: Set Focus Strategy (Default: All, Top, Middle, Bottom options available)

Focus Sensitivity: Set the focus sensitivity (default is low, high, medium optional)

B)Exposure: Exposure mode, exposure compensation, backlight compensation, anti-flicker, gain limit, dynamic range, shutter, aperture, brightness, gain can be set.

Exposure Mode: Set the exposure mode (Default automatic, manual, shutter priority, aperture priority, brightness priority optional)

Exposure Compensation: Exposure compensation setting is active when it is auto status (default is off).

Exposure Compensation Value: Set the exposure compensation value, valid when Exposure Compensation is on (default 0, -7 to 7 optional).

BLC: Set back light compensation, valid when it is auto status (default is off).

Anti-flicker: Enable anti-flicker mode, effective only in Auto Exposure mode and Aperture/Brightness Priority modes (default 50Hz, with Off and 60Hz options available).

Gain Limit: Set the gain limit. Only effective in Auto Exposure mode or Aperture/Brightness Priority mode (default 6, selectable from 0 to 15).

Gain: Set gain, only valid in manual exposure mode and shutter priority (default 1, 0~15 optional)

Dynamic Range: Set the dynamic range (default 3, 1-8 optional).

Shutter Speed: Set shutter speed value, valid in manual focus and shutter priority. (default 1/100，1/25, 1/30, 1/50, 1/60, 1/90, 1/100, 1/120, 1/180, 1/250, 1/350, 1/500, 1/1000, 1/2000, 1/3000, 1/4000, 1/6000, 1/10000 optional).

Aperture Value: Set the aperture value, valid in auto focus and iris priority (default F1.8, closed, F11, F9.6, F8.0, F6.8, F5.6, F4.8, F4.0, F3.4, F2 .8, F2.4, F2.0, F1.8 optional).

Brightness: Set the brightness value, valid in brightness priority mode (default 10, 0-20optional).

C)Color: White balance, saturation, hue, white balance sensitivity, red fine tuning, blue fine tuning, red gain, blue gain can be set.

White Balance Mode: Set white balance mode (default Auto, options include Manual, One-Touch White Balance, and Custom Color Temperature). Note: When selecting One-Touch White Balance mode, press the “Correct” button on the right.

Custom Color Temperature: Default 4400K, adjustable range: 2400K–7100K (only effective in Custom Color Temperature mode).

Red Fine-Tune: Adjust red fine-tune (only effective when white balance mode is Auto; default 0, selectable range -10 to 10)

Blue Fine-Tune: Adjust blue fine-tune (only effective when white balance mode is Auto; default 1, selectable range -10 to 10)

Saturation: Adjust saturation (default 40, selectable range 0 to 127)

Chroma: Adjust chroma (default 4, selectable range 0 to 8)

White Balance Sensitivity: Set white balance sensitivity (Default: High, Selectable: Medium, Low)

Red Gain: Set red gain, only effective when white balance mode is manual (Default: 36, Selectable: 0~100)

Blue Gain: Set blue gain, only effective when white balance mode is manual (Default: 36, Selectable: 0~100)

D)Image: You can set brightness, contrast, sharpness, gamma curve, dynamic contrast, black and white mode, horizontal flip, vertical flip, electronic zoom, ultra-low illumination

Brightness: Adjust brightness (default 50, selectable from 0 to 100)

Contrast: Adjust contrast (default 50, selectable from 0 to 100)

Sharpness: Adjust sharpness value (default 3, selectable from 0 to 15)

Gamma Curve: Adjust gamma curve value (default, selectable from 0.45, 0.50, 0.55, 0.63)

Black & White Mode: Set black & white mode (default: color, options: black & white)

Horizontal Flip: Set horizontal flip (displayed when auto flip is off, default: off, options: on)

Vertical Flip: Set vertical flip (displayed when auto flip is off, default: off, options: on)

Electronic Zoom: Set electronic zoom (default: off, options: on)

Auto Flip: Set image flip (default On, selectable Off)

Ultra Low Light: Set ultra low light (default Off, selectable On)

E)Noise Reduction: 2D noise reduction, 3D noise reduction and dynamic dead pixel correction available.

2D Noise Reduction: Set 2D noise reduction level (default 2, 1-7 and off optional).

3D Noise Reduction: Set 3D noise reduction level (default 5, 1-7 and off optional).

F)Style: Select image (Default, standard, brightness, clarity, and soft can be set)

Note: Refresh the page after changing above parameters in a, b, c, d, e, f to take effect.

5)Character Overlapping

Display Time & Date: Yes/No

Display Title: Yes/No

Time, Font and Color: Default white, black, yellow, red and blue optional)

Title Font Color: Default white, black, yellow, red, and blue optional)

Move Character: Set the location where the time and title to display. Click “up, down, left, right” button to move the characters’ location.

Click “Save” button, “parameters are successfully saves” window pop-up, which means the setting take effect.

6)Character Size

Automatically Adjust According to the Resolution: Yes/No

Main Stream Character Size: Set the character size of the display, the device will automatically restart after changed (default 48, 8-200 optional)

Secondary Stream Character Size: Set the character size of the display, the device will automatically restart after changed (default 48, 8-200 optional)

Click “Save” button, “parameters are successfully saves” window pop-up, which means the setting take effect.

7)Video Output

Output Format: Set video output format

3840×2160P30, 3840×2160P25, 1080P60, 1080P50, 1080P30, 1080P25, 720P60, 720P50, 1080P59.94, 1080P29.97, 720P59.94 available

4K Output Options: Configure 4K output options: USB output 4K, network stream 1080P, network stream output 4K, USB 1080P available

Click “Save” button, “parameters are successfully saves” window pop-up, which means the setting take effect.

4.2.7 Network Configuration

1) Network Port

Data Port: set the data port, the device will restart automatically after changed (default 3000, 0-65535 optional).

Web Port: Set Web port, the device will restart automatically after changed (default is 80, 0-65535 is optional).

Onvif Port: Set Onvif port, the device will restart automatically after changed (default 2000, 0-65535 optional).

Soap Port: Set Soap port (default 1936, 0-65535 optional).

RTMP Port: Set RTMP port (default 1935, 0-65535 optional).

RTSP Port: Set RTSP port, the device will restart automatically after changed (default 554, 0-65535 optional).

Visca Port: Set Visca port, the device will restart automatically after changed (default 1259, 0-65535 optional).

Https Port: Set http port, the device will restart automatically after changed (default 443, 0-65535 optional).

WebSocket Port: Set WebSocket port, the device will restart automatically after changed (default 8088, 0-65535 optional).

Click on the "Save" button, it will be valid when display "Save successful".

RTSP Access Method: rtsp://device_IP_address:554/live/av0 (av0 primary stream; av1 secondary stream)

RTMP Access Method: rtmp://device_IP_address:1935/live/av0 (av0 primary stream; av1 secondary stream)

2)Ethernet Parameter

DHCP: Enable or disable obtain IP automatically can be set. After saved, reboot the device to takes effect (default: OFF)

IP Address: Set the IP address, after saved, reboot the device to takes effect (default 192.168.5.163).

Note: This IP address is the same with the one used to login Web page.

Subnet Mask: Set the subnet mask (default 255.255.255.0).

Default Gateway: Set the default gateway (default 0.0.0.0).

Physical Address: Set the physical address (the parameter is read-only)

Click the "Save" button, it will be valid when display "Save successful". (Note: To prevent IP conflicts when modify).

3) DNS parameters

Preferred DNS Server: Set the preferred DNS server. (Default 0.0.0.0).

Alternate DNS Server: Set alternate DNS server. (Default 0.0.0.0).

Click the "Save" button, it will be valid when display "Save successful".

4) GB28181

Switch: Set whether to activate GB28181.

Time Synchronization: Enable/Disable time synchronization

Stream Type: Set stream type (default main stream, secondary stream optional)

Signing Time (in seconds): 3600, range 5-65535

Heartbeat Time (seconds): 60, range 1-65535

Register ID: 34020000001320000001

Register User Name: IPC

Register Password: 12345678

Equipment Ownership: Users can add their own

Administrative Regions: Users can add their own

Alarm Zone: Users can add their own

Equipment Installation Address: Users can add their own

Local SIP Port: 5060 Range 0-65535

GB28181 Server Address: IP address of the computer

Server SIP Port: 5060 Range 0-65535

Server ID: 34020000002000000001

Click on the "Save" button, it will be valid when display "Save successful".

5) SRT

SRT Port: Set the SRT port (default 9000, 0-65535 optional)

SRT Password: Set SRT password

SRT Password Length: Set the SRT password length (default 0, 16, 24, 32 optional)

Click the "Save" button, and the prompt message "Parameters saved successfully! It will take effect after restarting!"

6）RTMP

Enable RTMP: Enable/Disable RTMP

Click the "Save" button, and it will display "Parameters saved successfully! The new parameter will take effect after restarting.

7) RTSP

Enable RTSP: Enable/Disable RTSP

RTSP Authentication: Set RTSP authentication, default off, on optional

Click the "Save" button, and the prompt message "Save successfully! Modify RTSP authentication parameters will take effect after restarting the device!" will be displayed. After setting, restart the camera to take effect.

4.2.8 System Configuration

1) Device Properties

Device Name: Set the device name (Default Camera-1, user can add their own).

Device ID: Set the device ID (default 1, read-only).

System Language: Set the system language (default Simplified Chinese, English optional).Need to re-login after modify and save the setting.

Click on the "Save" button, it will be valid when display "Save successful".

2) System Time

Date Format: Set the date format (YYYY-MM-DD default year - month - day, MM-DD-YYYY namely Month - Day - Year, DD-MM-YYYY date - month - year Optional).

Date Separator: set the date separator (default '/','.','-' Optional).

Time Zone: Set the time zone (default UTC+08:00, other time zones optional).

Time Type: Set the time types (default 24 hours, optional 12 hours).

Enable NTP: Enable/disable NTP

Update Interval: Set the NTP server automatic updated time interval. Valid after setting NTP server synchronization (default one day, 2-10 days Optional).

NTP Server Address or Domain Name: Set NTP server address or domain name (default time.nits.gov). Valid after setting NTP server synchronization.

NTP Server Port: Sets the NTP server port (default 123).Valid after setting NTP server synchronization.

Click on the "Save" button, it will be valid when display "Save successful".

3) User Management

Select Users: Set the user type (the default administrator, User 1, User 2 optional)

User Name: Set the user name (Select User Administrator default admin; select a common user1 default user1; to select a common user 2 default user2; user can modify their own)

Password: Set a password (Select User Administrator default admin; select a common user1 default user1; to select a common user 2 default user2; user can modify their own).

Password Confirmation: Confirm the input passwords are the same or not.

4)Version Update

The version information displayed on the page is read-only version and cannot be modified by the user. It is the same as the version information in the menu. The version information of different device models is different.

Update File: Click "Browse..." in the pop-up window and select the upgrade file; click the "Upgrade" button, the upgrade dialog box will pop up. After successfully update, device will automatically reboot. (Note: Make sure that the device power and network can work during update, if not, the upgrade will fail.)

Note: After the version upgrade is completed, you need to restore the factory default values

a, restore the factory default through web configuration;

b, restore the factory default value through the menu;

c, remote control shortcut key *#6 restore factory default;

Choose one of the above three methods, in which the IP account and password of “method a” are also restored to the default.

---

5) Restore Factory Setting

Click "Restore Factory Defaults" button and choose “yes” or “no” on pop-up window, then the device will restart automatically and restore factory setting.

6) Reboot

Click "Reboot" button and choose “yes” or “no” on the pop-up window, then the device will restart automatically.

4.2.9 Logout

Click "Logout"; and select "Yes" or "No" on pop-up window. If choose “Yes”, you will exit the current page and return to the user login interface again.

5. Serial Port Communication Port

In normal working state, you can control the camera through RS232/RS485 (VISCA IN) cable. The parameter of RS232 is as below:

Baud rate: 2400/4800/9600/115200/second

Start Bit: 1 bit;

Data Bit: 8 bit;

Stop Bit: 1 bit;

Verification Bit: None.

After power on, the camera will have a brief tour and then back to the center position.

The zoom lens is pulled to the farthest position, and then pulled back, after that self-test is completed.

5.1 VISCA Protocol List

5.1.1 VISCA Protocol List

Ack/Completion Message		
	Command Packet	**Remark**
ACK	z0 41 FF	Returned when the command is accepted.
Completion	z0 51 FF	Returned when the command has been executed.

z = device address + 8

Error Messages		
	Command Packet	**Remark**
Syntax Error	z0 60 02 FF	Returned when the command format is different or when a command with illegal command parameters is accepted.
Command Buffer Full	z0 60 03 FF	Indicates that two sockets are already being used(executing two commands) and the command could not be accepted when received.
Command Canceled	z0 6y 04 FF(y: Socket No.)	Returned when a command which is being executed in a socket specified by the cancel command is canceled. The completion message for the command is not returned.
No Socket	z0 6y 05 FF(y: Socket No.)	Returned when no command is executed in a socket specified by the cancel command, or when an invalid socket number is specified.

Command Not Executable	z0 6y 41 FF(y: Execution command Socket No. Inquiry command: 0)	Returned when a command cannot be executed due to current conditions. For example, when commands controlling the focus manually are received during auto focus.

5.1.2 Camera Control Command

Command	Function	Command Packet	Remark
AddressSet	Broadcast	88 30 0p FF	p: Address setting
IF_Clear	Broadcast	88 01 00 01 FF	I/F Clear
CAM _Power	On	8x 01 04 00 02 FF	Power ON/OFF
	Off	8x 01 04 00 03 FF	
CAM_Zoom	Stop	8x 01 04 07 00 FF	
	Tele(Standard)	8x 01 04 07 02 FF	
	Wide(Standard)	8x 01 04 07 03 FF	
	Tele(Variable)	8x 01 04 07 2p FF	p = 0(low) - 7(high)
	Wide(Variable)	8x 01 04 07 3p FF	
	Direct	8x 01 04 47 0p 0q 0r 0s FF	pqrs: Zoom Position
CAM _Focus	Stop	8x 01 04 08 00 FF	
	Far(Standard)	8x 01 04 08 02 FF	
	Near(Standard)	8x 01 04 08 03 FF	
	Far(Variable)	8x 01 04 08 2p FF	p = 0(low) - 7(high)
	Near (Variable)	8x 01 04 08 3p FF	
	Direct	8x 01 04 48 0p 0q 0r 0s FF	pqrs: Focus Position
	Auto Focus	8x 01 04 38 02 FF	
	Manual Focus	8x 01 04 38 03 FF	
	One Push mode	8x 01 04 38 04 FF	
	One Push Triger	8x 01 04 18 01 FF	One Push Triger
CAM _Zoom Focus	Direct	8x 01 04 47 0p 0q 0r 0s 0t 0u 0v 0w FF	pqrs: Zoom Position tuvw: Focus Position
CAM_AF Sensitivity	High	8x 01 04 58 01 FF	Focus sensitivity Setting

	Normal	8x 01 04 58 02 FF	
	Low	8x 01 04 58 03 FF	
CAM_AF Zone	Front	8x 01 04 AA 00 FF	Focus Region Setting
	Beting	8x 01 04 AA 01 FF	
	Meeting	8x 01 04 AA 02 FF	
	Education	8x 01 04 AA 03 FF	
	Moving	8x 01 04 AA 04 FF	
	Middle	8x 01 04 AA 05 FF	
CAM_WB	Auto	8x 01 04 35 00 FF	
	3000K	8x 01 04 35 01 FF	
	4000k	8x 01 04 35 02 FF	
	One Push mode	8x 01 04 35 03 FF	
	5000k	8x 01 04 35 04 FF	
	Manual	8x 01 04 35 05 FF	
	6500k	8x 01 04 35 06 FF	
	3500K	8x 01 04 35 07 FF	
	4500K	8x 01 04 35 08 FF	
	5500K	8x 01 04 35 09 FF	
	6000K	8x 01 04 35 0A FF	
	7000K	8x 01 04 35 0B FF	
	One Push Trigger	8x 01 04 10 05 FF	One Push WB Trigger(Enabled during One Push WB mode)
CAM_AWB Sensitivity	Low	8x 01 04 A9 00 FF	WB Sensitivity Setting
	Normal	8x 01 04 A9 01 FF	
	High	8x 01 04 A9 02 FF	
CAM _RGain	Reset	8x 01 04 03 00 FF	Manual Control of R Gain
	Up	8x 01 04 03 02 FF	

	Down	8x 01 04 03 03 FF	
	Direct	8x 01 04 43 00 00 0p 0q FF	pq: R Gain
CAM_ Bgain	Reset	8x 01 04 04 00 FF	Manual Control of B Gain
	Up	8x 01 04 04 02 FF	
	Down	8x 01 04 04 03 FF	
	Direct	8x 01 04 44 00 00 0p 0q FF	pq: B Gain
CAM_AE	Full Auto	8x 01 04 39 00 FF	Automatic Exposure mode
	Manual	8x 01 04 39 03 FF	Manual Control mode
	Shutter priority	8x 01 04 39 0A FF	Shutter Priority Automatic Exposure mode
	Iris priority	8x 01 04 39 0B FF	Iris Priority Automatic Exposure mode
	Bright	8x 01 04 39 0D FF	Bright mode
CAM_Shutter	Reset	8x 01 04 0A 00 FF	Shutter Setting
	Up	8x 01 04 0A 02 FF	
	Down	8x 01 04 0A 03 FF	
	Direct	8x 01 04 4A 00 00 0p 0q FF	pq: Shutter Position
CAM_Iris	Reset	8x 01 04 0B 00 FF	Iris Setting
	Up	8x 01 04 0B 02 FF	
	Down	8x 01 04 0B 03 FF	
	Direct	8x 01 04 4B 00 00 0p 0q FF	pq: Iris Position
CAM_Gain Limit	Reset	8x 01 04 0C 00 FF	Gain Limit Setting
	Up	8x 01 04 0C 02 FF	
	Down	8x 01 04 0C 03 FF	
	Gain Limit	8x 01 04 2C 0p FF	p: Gain Positon
CAM_Bright	Reset	8x 01 04 0D 00 FF	Bright Setting
	Up	8x 01 04 0D 02 FF	
	Down	8x 01 04 0D 03 FF	
	Direct	8x 01 04 4D 00 00 0p 0q FF	pq: Bright Positon
CAM_ExpComp	On	8x 01 04 3E 02 FF	Exposure Compensation ON/OFF
	Off	8x 01 04 3E 03 FF	
	Reset	8x 01 04 0E 00 FF	Exposure Compensation Amount

	Up	8x 01 04 0E 02 FF	Setting
	Down	8x 01 04 0E 03 FF	
	Direct	8x 01 04 4E 00 00 0p 0q FF	pq: ExpComp Position
CAM_Back Light	On	8x 01 04 33 02 FF	Back Light Compensation
	Off	8x 01 04 33 03 FF	
CAM_WDRStrength	Reset	8x 01 04 21 00 FF	WDR Level Setting
	Up	8x 01 04 21 02 FF	
	Down	8x 01 04 21 03 FF	
	Direct	8x 01 04 51 00 00 00 0p FF	p: WDR Level Positon
CAM_NR	2D	8x 01 04 53 0p FF	P=0-7 0:OFF
	3D	8x 01 04 54 0p FF	P=0-8 0:OFF
CAM_Gamma		8x 01 04 5B 0p FF	p = 0 – 4 0: Default 1: 0.45 2: 0.50 3: 0.55 4: 0.63
CAM_Low-Light Mode	ON	8x 01 04 2D 01 FF	Low-Light Mode Setting
	OFF	8x 01 04 2D 00 FF	
CAM_Gain		8x 01 04 4C 00 00 0p 0q FF	pq: 0-20
CAM PresetSpeed		8x 01 01 0p FF	p: 1-10
CAM_Flicker	OFF	8x 01 04 23 00 FF	OFF
	50HZ	8x 01 04 23 01 FF	50HZ
	60HZ	8x 01 04 23 02 FF	60HZ
CAM_Aperture	Reset	8x 01 04 02 00 FF	Aperture Control
	Up	8x 01 04 02 02 FF	
	Down	8x 01 04 02 03 FF	
	Direct	8x 01 04 42 00 00 0p 0q FF	pq: Aperture Gain
CAM_Picture effect	B&W-Mode	8x 01 04 63 04 FF	Picture effect Setting
	OFF	8x 01 04 63 00 FF	
CAM_Memory	Reset	8x 01 04 3F 00 pq FF	pq: Memory Number(=0 to 254) Corresponds to 0 to 9 on the Remote Commander
	Set	8x 01 04 3F 01 pq FF	
	Recall	8x 01 04 3F 02 pq FF	
CAM_LR_Reverse	On	8x 01 04 61 02 FF	Image Flip Horizontal ON/OFF

	Off	8x 01 04 61 03 FF	
CAM_PictureFlip	On	8x 01 04 66 02 FF	Image Flip Vertical ON/OFF
	Off	8x 01 04 66 03 FF	
CAM_ColorSaturation	Direct	8x 01 04 49 00 00 00 0p FF	P=0-E 0:60% 1:70% 2:80% 3:90% 4:100% 5:110% 6:120% 7:130% 8:140% 9:150% 10:160% 11:160% 12:180% 13:190% 14:200%
CAM_IDWrite		8x 01 04 22 0p 0q 0r 0s FF	pqrs: Camera ID (=0000 to FFFF)
SYS_Menu	ON	8x 01 04 06 06 02 FF	Turn on the menu screen
	OFF	8x 01 04 06 06 03 FF	Turn off the menu screen
IR_Receive	ON	8x 01 06 08 02 FF	IR(remote commander)receive On/Off
	OFF	8x 01 06 08 03 FF	
CAM_Setting Reset	Reset	8x 01 04 A0 10 FF	Reset Factory Setting
CAM_Brightness	Direct	8x 01 04 A1 00 00 0p 0q FF	pq: Brightness Position
CAM_Contrast	Direct	8x 01 04 A2 00 00 0p 0q FF	pq: Contrast Position
CAM_Flip	OFF	8x 01 04 A4 00 FF	Single Command For Video Flip
	Flip-H	8x 01 04 A4 01 FF	
	Flip-V	8x 01 04 A4 02 FF	
	Flip-HV	8x 01 04 A4 03 FF	
CAM_VideoSystem	Set Camera video system	8x 01 06 35 00 0p FF	P: 0~E Video format
Pan_tiltDrive	Up	8x 01 06 01 VV WW 03 01 FF	VV: Pan speed 0x01 (low speed) to 0x18 (high speed) WW: Tilt speed 0x01 (low speed) to 0x14 (high speed) YYYY: Pan Position ZZZZ: Tilt Position
	Down	8x 01 06 01 VV WW 03 02 FF	
	Left	8x 01 06 01 VV WW 01 03 FF	
	Right	8x 01 06 01 VV WW 02 03 FF	
	Upleft	8x 01 06 01 VV WW 01 01 FF	
	Upright	8x 01 06 01 VV WW 02 01 FF	
	DownLeft	8x 01 06 01 VV WW 01 02 FF	
	DownRight	8x 01 06 01 VV WW 02 02 FF	
	Stop	8x 01 06 01 VV WW 03 03 FF	
	AbsolutePosition	8x 01 06 02 VV WW 0Y 0Y 0Y 0Y 0Z 0Z 0Z 0Z FF	

	RelativePositio n	8x 01 06 03 VV WW 0Y 0Y 0Y 0Y 0Z 0Z 0Z 0Z FF	
	Home	8x 01 06 04 FF	
	Reset	8x 01 06 05 FF	
Pan-tiltLimitSet	Set	8x 01 06 07 00 0W 0Y 0Y 0Y 0Y 0Z 0Z 0Z 0Z FF	W:1 UpRight 0:DownLeft YYYY: Pan Limit Position(TBD) ZZZZ: Tilt Limit Position(TBD)
	Clear	8x 01 06 07 01 0W 07 0F 0F 0F 07 0F 0F 0F FF	

5.1.3 Inquiry Command

Command	Command Packet	Return Packet	Remark
CAM_PowerInq	8x 09 04 00 FF	y0 50 02 FF	On
		y0 50 03 FF	Off(Standby)
CAM_ZoomPosInq	8x 09 04 47 FF	y0 50 0p 0q 0r 0s FF	pqrs: Zoom Position
CAM_FocusAFModeIn q	8x 09 04 38 FF	y0 50 02 FF	Auto Focus
		y0 50 03 FF	Manual Focus
		y0 50 04 FF	One Push mode
CAM_FocusPosInq	8x 09 04 48 FF	y0 50 0p 0q 0r 0s FF	pqrs: Focus Position
CAM_AFSensitivityInq	8x 09 04 58 FF	y0 50 01 FF	High
		y0 50 02 FF	Normal
		y0 50 03 FF	Low
CAM_AFZoneInq	8x 09 04 AA FF	y0 50 00 FF	Front
		y0 50 01 FF	Beting
		y0 50 02 FF	Meeting
		y0 50 03 FF	Education
		y0 50 04 FF	Moving
		y0 50 05 FF	Middle
CAM_WBModeInq	8x 09 04 35 FF	y0 50 00 FF	Auto
		y0 50 01 FF	3000K

		y0 50 02 FF	4000K
		y0 50 03 FF	One Push Mode
		y0 50 04 FF	5000K
		y0 50 05 FF	Manual
		y0 50 00 FF	6500K
		y0 50 06 FF	6500K
		y0 50 07 FF	3500K
		y0 50 08 FF	4500K
		y0 50 09 FF	5500K
		y0 50 0A FF	6000K
		y0 50 0B FF	7000K
CAM_AWBSensitivityInq	8x 09 04 A9 FF	y0 50 00 FF	Low
		y0 50 01 FF	Normal
		y0 50 02 FF	High
CAM_RGainInq	8x 09 04 43 FF	y0 50 00 00 0p 0q FF	pq: R Gain
CAM_BGainInq	8x 09 04 44 FF	y0 50 00 00 0p 0q FF	pq: B Gain
CAM_AEModeInq	8x 09 04 39 FF	y0 50 00 FF	Full Auto
		y0 50 03 FF	Manual
		y0 50 0A FF	Shutter priority
		y0 50 0B FF	Iris priority
		y0 50 0D FF	Bright
CAM_ShutterPosInq	8x 09 04 4A FF	y0 50 00 00 0p 0q FF	pq: Shutter Position
CAM_IrisPosInq	8x 09 04 4B FF	y0 50 00 00 0p 0q FF	pq: Iris Position
CAM_Gain LimitInq	8x 09 04 2C FF	y0 50 0p FF	p: Gain Positon
CAM_ BrightPosiInq	8x 09 04 4D FF	y0 50 00 00 0p 0q FF	pq: Bright Position
CAM_ExpCompModeInq	8x 09 04 3E FF	y0 50 02 FF	On
		y0 50 03 FF	Off
CAM_ExpCompPosInq	8x 09 04 4E FF	y0 50 00 00 0p 0q FF	pq: ExpComp Position
CAM_BacklightModeInq	8x 09 04 33 FF	y0 50 02 FF	On
		y0 50 03 FF	Off
CAM_WDRStrengthInq	8x 09 04 51 FF	y0 50 00 00 00 0p FF	p: WDR Strength

CAM_NRLevel(2D) Inq	8x 09 04 53 FF	y0 50 0p FF	P: 2DNRLevel
CAM_NRLevel(3D) Inq	8x 09 04 54 FF	y0 50 0p FF	P:3D NRLevel
CAM_FlickerModeInq	8x 09 04 55 FF	y0 50 0p FF	p: Flicker Settings(0: OFF, 1: 50Hz, 2:60Hz)
CAM_ApertureInq	8x 09 04 42 FF	y0 50 00 00 0p 0q FF	pq: Aperture Gain
CAM_PictureEffectModeInq	8x 09 04 63 FF	y0 50 00 FF	Off
		y0 50 04 FF	B&W
CAM_MemoryInq	8x 09 04 3F FF	y0 50 0p FF	p: Memory number last operated.
SYS_MenuModeInq	8x 09 06 06 FF	y0 50 02 FF	On
		y0 50 03 FF	Off
CAM_LR_ReverseInq	8x 09 04 61 FF	y0 50 02 FF	On
		y0 50 03 FF	Off
CAM_PictureFlipInq	8x 09 04 66 FF	y0 50 02 FF	On
		y0 50 03 FF	Off
CAM_ColorSaturationInq	8x 09 04 49 FF	y0 50 00 00 00 0p FF	p: Color Gain setting 0h (60%) to Eh (130%)
CAM_IDInq	8x 09 04 22 FF	y0 50 0p FF	p: Camera ID
IR_ReceiveInq	8x 09 06 08 FF	y0 50 02 FF	On
		y0 50 03 FF	Off
CAM_BrightnessInq	8x 09 04 A1 FF	y0 50 00 00 0p 0q FF	pq: Brightness Position
CAM_ContrastInq	8x 09 04 A2 FF	y0 50 00 00 0p 0q FF	pq: Contrast Position
CAM_FlipInq	8x 09 04 A4 FF	y0 50 00 FF	Off
		y0 50 01 FF	Flip-H
		y0 50 02 FF	Flip-V
		y0 50 03 FF	Flip-HV
CAM_GammaInq	8x 09 04 5B FF	y0 50 0p FF	p: Gamma setting
CAM_VersionInq	8x 09 00 02 FF	y0 50 ab cd mn pq rs tu vw FF	ab cd : vender ID (0220) mn pq : model ID rs tu: ARM Version vw: reserve
VideoSystemInq	8x 09 06 23 FF	y0 50 0p FF	P: 0~E Video format 0:1080P60 1:1080P50 2:1080i60

			3:1080i50 4:720P60 5:720P50 6:1080P30 7:1080P25 A: 1080P59.94 C: 720P59.9 D: 1080P29.97 19:4kP30 1A:4KP25
Pan-tiltMaxSpeedInq	8x 09 06 11 FF	y0 50 ww zz FF	ww: Pan Max Speed zz: Tilt Max Speed
Pan-tiltPosInq	8x 09 06 12 FF	y0 50 0w 0w 0w 0w 0z 0z 0z 0z FF	wwww: Pan Position zzzz: Tilt Position

Note: [x] in the above table represents the address of the device to be operated, [y]=[x + 8].

5.2 Pelco-D Protocol Command List

Function	Byte1	Byte2	Byte3	Byte4	Byte5	Byte6	Byte7
Up	0xFF	Address	0x00	0x08	Pan Speed	Tilt Speed	SUM
Down	0xFF	Address	0x00	0x10	Pan Speed	Tilt Speed	SUM
Left	0xFF	Address	0x00	0x04	Pan Speed	Tilt Speed	SUM
Right	0xFF	Address	0x00	0x02	Pan Speed	Tilt Speed	SUM
Upleft	0xFF	Address	0x00	0x0C	Pan Speed	Tilt Speed	SUM
Upright	0xFF	Address	0x00	0x0A	Pan Speed	Tilt Speed	SUM
DownLeft	0xFF	Address	0x00	0x14	Pan Speed	Tilt Speed	SUM
DownRight	0xFF	Address	0x00	0x12	Pan Speed	Tilt Speed	SUM
Zoom In	0xFF	Address	0x00	0x20	0x00	0x00	SUM
Zoom Out	0xFF	Address	0x00	0x40	0x00	0x00	SUM
Focus Far	0xFF	Address	0x00	0x80	0x00	0x00	SUM
Focus Near	0xFF	Address	0x01	0x00	0x00	0x00	SUM
Stop	0xFF	Address	0x00	0x00	0x00	0x00	SUM
Set Preset	0xFF	Address	0x00	0x03	0x00	Preset ID	SUM
Clear Preset	0xFF	Address	0x00	0x05	0x00	Preset ID	SUM
Call Preset	0xFF	Address	0x00	0x07	0x00	Preset ID	SUM

Query Pan Position	0xFF	Address	0x00	0x51	0x00	0x00	SUM
Query Pan Position Response	0xFF	Address	0x00	0x59	Value High Byte	Value Low Byte	SUM
Query Tilt Position	0xFF	Address	0x00	0x53	0x00	0x00	SUM
Query Tilt Position Response	0xFF	Address	0x00	0x5B	Value High Byte	Value Low Byte	SUM
Query Zoom Position	0xFF	Address	0x00	0x55	0x00	0x00	SUM
Query Zoom Position Response	0xFF	Address	0x00	0x5D	Value High Byte	Value Low Byte	SUM

5.3 Pelco-P Protocol Command List

Function	Byte1	Byte2	Byte3	Byte4	Byte5	Byte6	Byte7	Byte8
Up	0xA0	Address	0x00	0x08	Pan Speed	Tilt Speed	0xAF	XOR
Down	0xA0	Address	0x00	0x10	Pan Speed	Tilt Speed	0xAF	XOR
Left	0xA0	Address	0x00	0x04	Pan Speed	Tilt Speed	0xAF	XOR
Right	0xA0	Address	0x00	0x02	Pan Speed	Tilt Speed	0xAF	XOR
Upleft	0xA0	Address	0x00	0x0C	Pan Speed	Tilt Speed	0xAF	XOR
Upright	0xA0	Address	0x00	0x0A	Pan Speed	Tilt Speed	0xAF	XOR
DownLeft	0xA0	Address	0x00	0x14	Pan Speed	Tilt Speed	0xAF	XOR
DownRight	0xA0	Address	0x00	0x12	Pan Speed	Tilt Speed	0xAF	XOR
Zoom In	0xA0	Address	0x00	0x20	0x00	0x00	0xAF	XOR
Zoom Out	0xA0	Address	0x00	0x40	0x00	0x00	0xAF	XOR
Stop	0xA0	Address	0x00	0x00	0x00	0x00	0xAF	XOR
Focus Far	0xA0	Address	0x01	0x00	0x00	0x00	0xAF	XOR
Focus Near	0xA0	Address	0x02	0x00	0x00	0x00	0xAF	XOR

Set Preset	0xA0	Address	0x00	0x03	0x00	Preset ID	0xAF	XOR
Clear Preset	0xA0	Address	0x00	0x05	0x00	Preset ID	0xAF	XOR
Call Preset	0xA0	Address	0x00	0x07	0x00	Preset ID	0xAF	XOR
Query Pan Position	0xA0	Address	0x00	0x51	0x00	0x00	0xAF	XOR
Query Pan Position Response	0xA0	Address	0x00	0x59	Value High Byte	Value Low Byte	0xAF	XOR
Query Tilt Position	0xA0	Address	0x00	0x53	0x00	0x00	0xAF	XOR
Query Tilt Position Response	0xA0	Address	0x00	0x5B	Value High Byte	Value Low Byte	0xAF	XOR
Query Zoom Position	0xA0	Address	0x00	0x55	0x00	0x00	0xAF	XOR
Query Zoom Position Response	0xA0	Address	0x00	0x5D	Value High Byte	Value Low Byte	0xAF	XOR

6. Maintenance and Troubleshooting

6.1 Camera Maintenance

1）Please disconnect power of camera if it is not in long-term use. Meanwhile, disconnect AC power adapter from AC socket.

2）To avoid scratch, use soft cloth or cotton to wipe off dust on camera case.

3）Please clean camera lens with dry soft cloth. If stain persists, use mild detergent to wipe gently.

Do not use strong or corrosive detergent which may scratch the lens and affect image result.

6.2 Troubleshooting

1) No image on video output

Solution:

a. Check if the device is properly powered and if the power indicator is lit

b. Power cycle the device to verify normal self-test

c. Inspect video output and display cables for integrity

2) Intermittent image display

Solution:

Inspect video output and display cables for integrity

3) Image shake during lens zoom

Solution:

a. Verify the device is securely mounted.

b. Check for nearby machinery or objects causing vibration.

4) Remote control unresponsive

Solution:

a. Test if the remote functions when set to address 1 (reset device to factory defaults to restore remote address to 1).

b. Verify remote control batteries are properly installed or sufficiently charged

c. Ensure the menu is not active; exit the menu for normal operation. When outputting web pages, the menu does not appear. No action is required; the menu will automatically exit after 30 seconds, allowing control.

5) Serial port cannot be controlled

Solution:

a. Verify if the control cable is our company's standard configuration.

b. Check if the serial device protocol, baud rate, and address match the device specifications.

c. Inspect whether the control cable is properly connected.

6) Web page cannot be logged into

Solution:

a. Use a monitor to verify if the device is outputting images normally.

b. Check if the network cable is properly connected (a flashing yellow indicator light on the network port indicates a valid connection).

c. Verify the computer is on the same subnet as the device and that the subnet matches the device's IP address.

d. On the computer, open “Start,” select “Run,” enter “cmd,” and click ‘OK’ to open the DOS command window. Enter “ping 192.168.5.163” and press Enter. If the information shown in Figure 6-1 appears, it indicates a network connection.

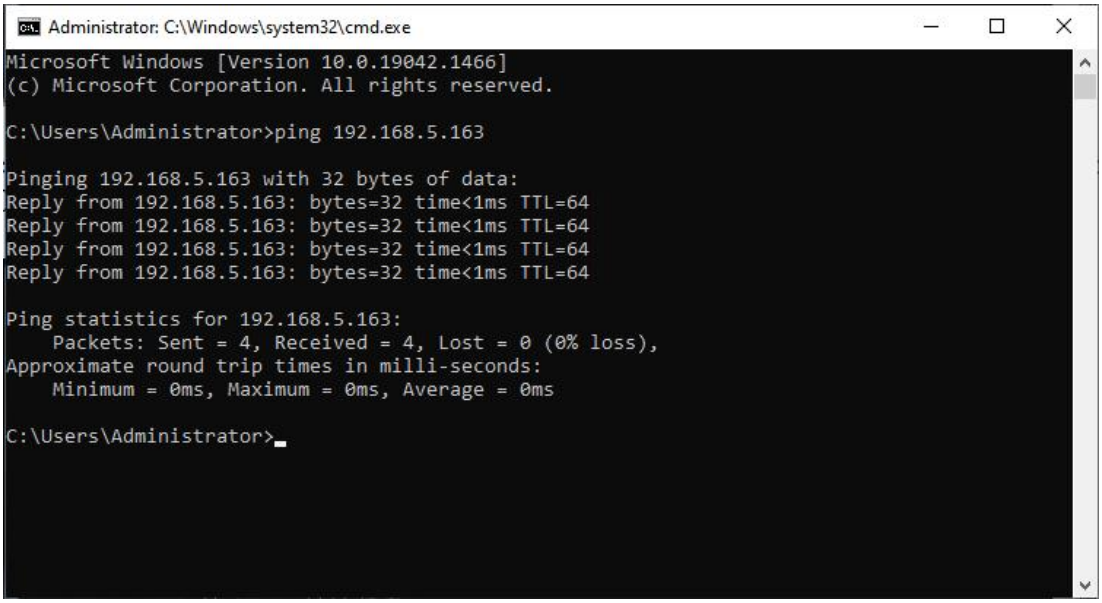

Figure 6-1 Network Connection Schematic